HAL open science

Tamm Review: Influence of forest management activities on soil organic carbon stocks: A knowledge synthesis

Mathias Mayer, Cindy Prescott, Wafa E A Abaker, Laurent Augusto, Lauric L. Cecillon, Gabriel W D Ferreira, Jason James, Robert Jandl, Klaus Katzensteiner, Jean-Paul Laclau, et al.

To cite this version:

Mathias Mayer, Cindy Prescott, Wafa E A Abaker, Laurent Augusto, Lauric L. Cecillon, et al.. Tamm Review: Influence of forest management activities on soil organic carbon stocks: A knowledge synthesis. Forest Ecology and Management, 2020, 466, pp.118127. 10.1016/j.foreco.2020.118127 . hal-02613724

HAL Id: hal-02613724

https://hal.inrae.fr/hal-02613724v1

Submitted on 4 Sep 2020

HAL is a multi-disciplinary open access archive for the deposit and dissemination of scientific research documents, whether they are published or not. The documents may come from teaching and research institutions in France or abroad, or from public or private research centers.

L'archive ouverte pluridisciplinaire **HAL**, est destinée au dépôt et à la diffusion de documents scientifiques de niveau recherche, publiés ou non, émanant des établissements d'enseignement et de recherche français ou étrangers, des laboratoires publics ou privés.

Distributed under a Creative Commons Attribution - NonCommercial - NoDerivatives 4.0 International License

Forest Ecology and Management 466 (2020) 118127

Contents lists available at ScienceDirect

Forest Ecology and Management

journal homepage: www.elsevier.com/locate/foreco

Tamm reviews

Tamm Review: Influence of forest management activities on soil organic carbon stocks: A knowledge synthesis

Mathias Mayer[a,b,*], Cindy E. Prescott[c], Wafa E.A. Abaker[d], Laurent Augusto[e], Lauric Cécillon[f,g], Gabriel W.D. Ferreira[h], Jason James[i], Robert Jandl[j], Klaus Katzensteiner[a], Jean-Paul Laclau[k,l], Jérôme Laganière[m], Yann Nouvellon[k,l], David Paré[m], John A. Stanturf[n], Elena I. Vanguelova[o], Lars Vesterdal[p]

[a] Institute of Forest Ecology, Department of Forest and Soil Sciences, University of Natural Resources and Life Sciences, Vienna (BOKU), Peter-Jordan Straße 82, 1190 Vienna, Austria
[b] Forest Soils and Biogeochemistry, Swiss Federal Institute for Forest, Snow and Landscape Research WSL, Zürcherstrasse 111, 8903 Birmensdorf, Switzerland
[c] Faculty of Forestry, University of British Columbia, 2424 Main Mall, Vancouver, BC V6T 1Z4, Canada
[d] Department of Silviculture, Faculty of Forestry, University of Khartoum, Sudan 13314 Shambat, Sudan
[e] INRAE, Bordeaux Sciences Agro, UMR 1391 ISPA, 33882 Villenave d'Ornon, France
[f] Université de Normandie, UNIROUEN, INRAE, ECODIV, Rouen, France
[g] Laboratoire de Géologie, UMR 8538, Ecole Normale Supérieure, Université PSL, CNRS, Paris, France
[h] Savannah River Ecology Laboratory, University of Georgia, P O Drawer E – Aiken, SC 29802, USA
[i] Exponent, Inc., 15375 SE 30th Pl, Suite 250, Bellevue, WA 98007, USA
[j] Department of Forest Ecology and Soils, Austrian Research Center for Forests, Seckendorff-Gudent-Weg 8, 1131 Vienna, Austria
[k] CIRAD, UMR Eco&Sols, 34060 Montpellier, Franc
[l] Eco&Sols, Univ Montpellier, CIRAD, INRA, IRD, Montpellier SupAgro 34060, Montpellier, France
[m] Natural Resources Canada, Canadian Forest Service, Laurentian Forestry Centre, 1055 Du P.E.P.S. Street, P.O. Box 10380, Québec, QC G1V 4C7, Canada
[n] Institute of Forestry and Rural Engineering, Estonian University of Life Sciences, Kreutzwaldi 5, 51014 Tartu, Estonia
[o] Forest Research, Alice Holt Lodge, Farnham, Surrey GU10 4LH, UK
[p] Department of Geosciences and Natural Resource Management, University of Copenhagen, Rolighedsvej 23, 1958 Frederiksberg C, Denmark

ABSTRACT

Almost half of the total organic carbon (C) in terrestrial ecosystems is stored in forest soils. By altering rates of input or release of C from soils, forest management activities can influence soil C stocks in forests. In this review, we synthesize current evidence regarding the influences of 13 common forest management practices on forest soil C stocks. Afforestation of former croplands generally increases soil C stocks, whereas on former grasslands and peatlands, soil C stocks are unchanged or even reduced following afforestation. The conversion of primary forests to secondary forests generally reduces soil C stocks, particularly if the land is converted to an agricultural land-use prior to reforestation. Harvesting, particularly clear-cut harvesting, generally results in a reduction in soil C stocks, particularly in the forest floor and upper mineral soil. Removal of residues by harvesting whole-trees and stumps negatively affects soil C stocks. Soil disturbance from site preparation decreases soil C stocks, particularly in the organic top soil, however improved growth of tree seedlings may outweigh soil C losses over a rotation. Nitrogen (N) addition has an overall positive effect on soil C stocks across a wide range of forest ecosystems. Likewise, higher stocks and faster accumulation of soil C occur under tree species with N-fixing associates. Stocks and accumulation rates of soil C also differ under different tree species, with coniferous species accumulating more C in the forest floor and broadleaved species tending to store more C in the mineral soil. There is some evidence that increased tree species diversity could positively affect soil C stocks in temperate and subtropical forests, but tree species identity, particularly N-fixing species, seems to have a stronger impact on soil C stocks than tree species diversity. Management of stand density and thinning have small effects on forest soil C stocks. In forests with high populations of ungulate herbivores, reduction in herbivory levels can increase soil C stocks. Removal of plant biomass for fodder and fuel is related to a reduction in the soil C stocks. Fire management practices such as prescribed burning reduce soil C stocks, but less so than wildfires which are more intense. For each practice, we identify existing gaps in knowledge and suggest research to address the gaps.

* Corresponding author.
E-mail addresses: mathias_mayer@gmx.at, mathias.mayer@boku.ac.at (M. Mayer), Cindy.Prescott@ubc.ca (C.E. Prescott), laurent.augusto@inra.fr (L. Augusto), lauric.cecillon@inrae.fr (L. Cécillon), gferreira@uga.edu (G.W.D. Ferreira), jamesj@exponent.com (J. James), robert.jandl@bfw.gv.at (R. Jandl), klaus.katzensteiner@boku.ac.at (K. Katzensteiner), jean-paul.laclau@cirad.fr (J.-P. Laclau), jerome.laganiere@canada.ca (J. Laganière), yann.nouvellon@cirad.fr (Y. Nouvellon), david.pare@canada.ca (D. Paré), johnalvin.stanturf@emu.ee (J.A. Stanturf), elena.vanguelova@forestresearch.gov.uk (E.I. Vanguelova), lv@ign.ku.dk (L. Vesterdal).

https://doi.org/10.1016/j.foreco.2020.118127
Received 6 January 2020; Received in revised form 26 March 2020; Accepted 31 March 2020
Available online 08 April 2020
0378-1127/ Crown Copyright © 2020 Published by Elsevier B.V. This is an open access article under the CC BY-NC-ND license (http://creativecommons.org/licenses/BY-NC-ND/4.0/).

1. Introduction

Soils store immense amounts of carbon (C), about two-thirds of which is in organic form derived from metabolic activities of living organisms. Most estimates of global soil organic C (hereafter soil C) stores are roughly 1500 petagrams of carbon (Pg C). Globally, soils store two-to-three times as much C in organic form as there is C in the atmosphere (Scharlemann et al., 2014), and organic C stocks in soil exceed those in plant biomass in most IPCC climatic regions (Fig. 1).

Forests cover an estimated 4.0–5.0 billion hectares globally (Birdsey and Pan, 2015; Keenan et al., 2015; Bastin et al., 2017), and contain about 860 Pg C. Globally, >40% of the total organic C in terrestrial ecosystems is stored in forest soils (IPCC, 2007; Wei et al., 2014). In 2007, total soil C stocks (including litter) were estimated at 202, 69, and 155 Pg for boreal, temperate and tropical forests, respectively (Pan et al., 2011). These soil C stocks equate to ~70% of the ecosystem C stock in the boreal forest, ~60% in temperate forests and ~30% in tropical forests, respectively (Pan et al., 2011).

The soil C stock represents the balance between inputs of organic matter to soils and the loss of C through decomposition, leaching, and erosion of organic matter (Fig. 2). The principal source of organic matter is dead plant material (litter) from both aboveground and belowground tissues. Other organic inputs are rhizodeposits, including exudates from plant roots and associated symbionts (e.g. mycorrhizal fungal mycelia), and faecal material and bodies of the soil biota. Once in or on the soil, organic materials are progressively transformed by soil fauna and microorganisms (fungi, bacteria and archaea). Extracellular enzymes released by microorganisms decompose the material into simpler compounds, which may be assimilated. Within microbes, a portion is respired as CO_2 and the remainder is synthesized into microbial biomass or into microbial metabolites, some of which (especially enzymes and polysaccharides) are exuded from the cell.

Turnover of the microbial biomass generates microbial products such as cell wall residues (including melanin, peptidoglycan and chitin), proteins, and enzymes (Miltner et al., 2009; Haddix et al., 2016; Paul, 2016). Proteins and amino acids can be directly adsorbed to clay minerals (Sollins et al., 2006) and microbial residues such as cell walls and mucilage have also been observed to be directly associated with mineral particles (Foster and Martin, 1981; Campbell and Porter, 1982; Foster et al., 1983; Miltner et al., 2012; Chenu et al., 2015; Paul, 2016). Bonding of organic matter at mineral surfaces is considered a major mechanism of long-term protection of soil C against decomposition (von Lützow et al., 2006; Hemingway et al., 2019). Other important soil C stabilization mechanisms are chemical associations, physical protection within micro-aggregates and micropores where the organic matter is less accessible to microbial exoenzymes (Görres et al., 1999; Six et al., 2002; Jastrow et al., 2007; Ruamps et al., 2011; Dungait et al., 2012; Quigley et al., 2018; Kravchenko et al., 2019).

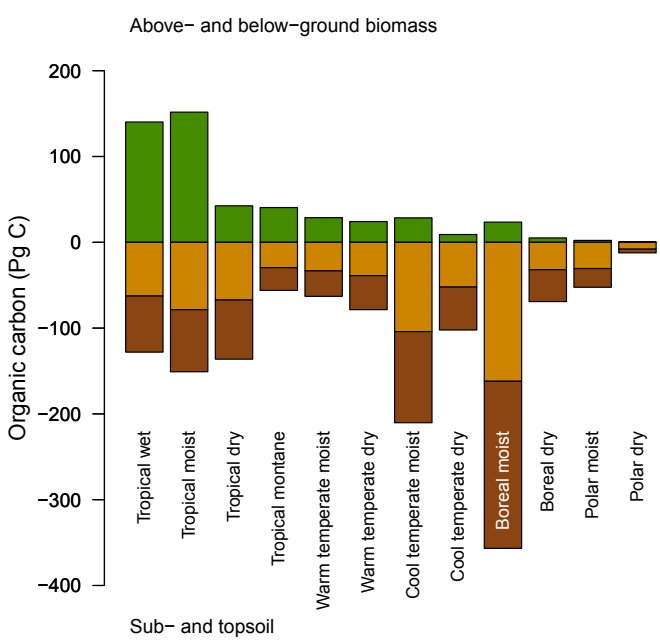

Fig. 1. Organic carbon stocks in subsoil (brown) and topsoil (orange), and in aboveground and belowground phytomass (green). Figure modified after Scharlemann et al. (2014).

Evidence that the more stable (*i.e.* slow turnover) soil C pools can be dominated by microbial products (Kelleher and Simpson, 2006; Simpson et al., 2007; Gleixner, 2013; Barré et al., 2018) prompted the suggestion that labile organic matter such as sugars may be as or even more important than recalcitrant organic matter in generating soil C – particularly stable soil C (Schmidt et al., 2011; Cotrufo et al., 2013; Cotrufo et al., 2015; Lehmann and Kleber, 2015; Kallenbach et al., 2016). Belowground fluxes of labile C in forests can be substantial (Högberg et al., 2001) and their release from roots and associated mycorrhizal fungi may be important C sources for microbial biomass and soil organic matter formation.

The size of the forest soil C stock is influenced by the interacting driving factors that determine the fertility and productivity of the site (climate, vegetation, topography, soil chemical, physical and biological properties and parent material) and the land-use and management practices (Barré et al., 2017; Jackson et al., 2017; Rasmussen et al., 2018; Wiesmeier et al., 2019). A detailed review of the key drivers and indicators for soil C stocks can be found in Wiesmeier et al. (2019). Natural and anthropogenic disturbances influence soil C stocks by affecting rates of organic matter input and decomposition. Natural disturbances such as wildfire, pests, diseases and windthrow can temporarily reduce soil C stocks of forests (Certini, 2005; Thom and Seidl, 2015; Zhang et al., 2015). Anthropogenic disturbance, related to both conversion of forests to other land uses, and modifications of forests involved in the provision of forest products and services also influence forest soil C stocks (Nave et al., 2010; Achat et al., 2015b; James and Harrison, 2016).

As the manner and intensity in which forests are managed can influence soil C stocks (Jandl et al., 2007), there is potential to consider this factor when planning management activities. Sustaining or increasing soil C stocks has many benefits in addition to ecosystem C sequestration, such as increased soil fertility and water-holding capacity, increasing potential site productivity, and fostering belowground biodiversity.

Here we synthesize the current scientific evidence regarding the influences of forest management practices on forest soil C stocks. We selected thirteen management practices which are relevant and applicable for forest practitioners (Fig. 3). For each management practice, we discuss considerations that must be assessed before implementing the practice in a given area, including potential barriers to adoption and contexts in which the practice might be most, and least, appropriate.

2. Afforestation

Afforestation of agricultural land is suggested as a measure for mitigation of climate change (Bastin et al., 2019) through on-site C sequestration in biomass and soil and by production of wood products and biomass that displace fossil fuel. The contribution of new forest biomass to C sequestration is well understood and modeled, but C sequestration in soil is more complex in terms of process understanding and assessments of soil C stock changes.

Several meta-analyses at regional and global scales have emerged in recent years (Laganiere et al., 2010; Don et al., 2011; Poeplau et al., 2011; Li et al., 2012; Nave et al., 2013; Bárcena et al., 2014b). The main messages from these studies are that afforestation on former cropland may result in a significant increase in soil C stocks over 100 years. In some studies, no new steady-state levels were reached within 100 years

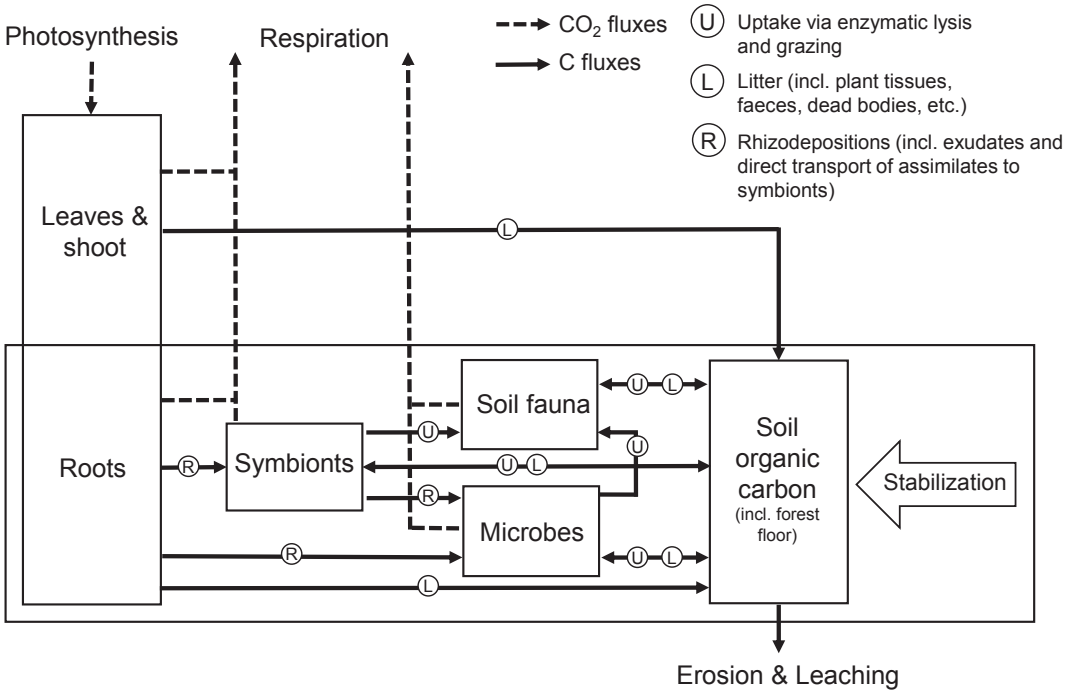

Fig. 2. Fluxes of carbon between atmosphere, vegetation and soil. Modified after Paterson et al. (2009).

(Poeplau et al., 2011; Bárcena et al., 2014b) while in others, modest decadal increases culminated in a ~15% net increase in soil C stock by the end of the first century (Nave et al., 2013). In contrast, following afforestation of grasslands, mean soil C stocks may increase less, remain unchanged or even decrease (Guo and Gifford, 2002; Bárcena et al., 2014b). Poeplau et al. (2011) reported that 75% of all grassland-to-forest conversions showed soil C losses, even after 100 years. The soil C sequestration rate after afforestation generally increases proportionally with temperature and precipitation, and a global meta-analysis by Laganiere et al. (2010) found rates to be highest for clay-rich (>33%)

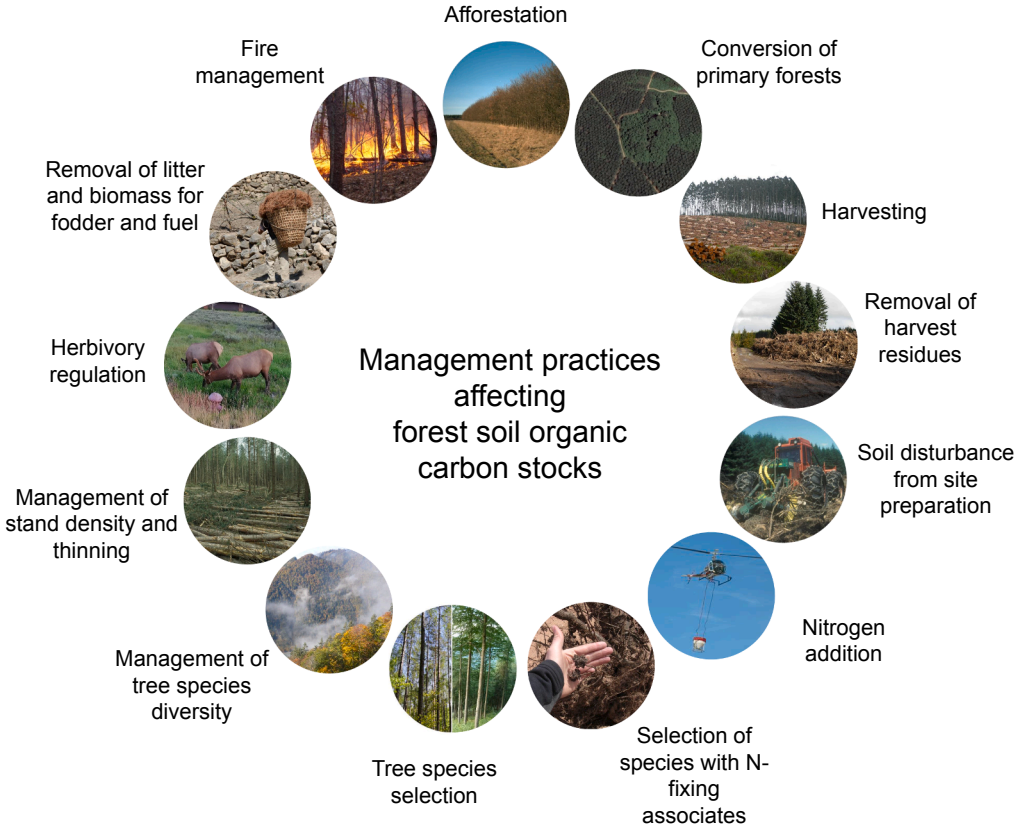

Fig. 3. Overview of forest management practices addressed in this review. Photo credits others than authors: Google Earth (Conversion of primary forests), O. Eckmüllner (Removal of harvesting residues), D. Binkley (Selection of species with N-fixing associates) T. Waldrop (Fire management).

soils.

Forest-floor development was the main driver for the positive effects of afforestation on soil C, especially in the case of conifer afforestation, but mineral soil C sequestration was higher under broadleaved species (Laganiere et al., 2010). Forest floors were the main initial C sink while there was little change in mineral soil C within the first three decades after afforestation in temperate regions (Nave et al., 2013; Poeplau and Don, 2013; Bárcena et al., 2014b). In tropical climates, a positive rate of sequestration was reported already within the first three decades (Don et al., 2011; Pausas and Fernández-Muñoz, 2012).

Overall synthesis studies showed higher and positive mineral soil C change when afforestation was on cropland, and limited or negative soil C change when afforestation was on grassland (Guo and Gifford, 2002; Laganiere et al., 2010; Don et al., 2011; Poeplau et al., 2011; Li et al., 2012; Bárcena et al., 2014b). Positive soil C changes were always observed in the organic layers regardless of the previous land use and the soil types. However, negative soil C changes were observed after afforestation of shallow and deep peat soils (Zerva and Mencuccini, 2005; Swain et al., 2010; Simola et al., 2012; Chapman et al., 2013; Vanguelova et al., 2019).

Site-level studies have revealed how the distribution of sequestered C in the soil profile changes over time. Resampling of oak (*Quercus robur* L.) and Norway spruce (*Picea abies* (L.) Karst.) chronosequences after afforestation of cropland in Denmark have shown that during the initial 30 years, soil C sequestration occurred mainly in the forest floor (spruce > oak) whereas the mineral soil (0–30 cm) exhibited small losses of soil C (Vesterdal et al., 2002). When these chronosequences were resampled 45 years after afforestation, soils appeared to be transitioning from forest floor to mineral soil C sequestration (Bárcena et al., 2014a). Studies of long-term trends are rare. Broad-leaved afforestation (50–110 years) on former cropland in the UK increased soil C stock at a rate of 0.49 Mg C ha^{-1} yr^{-1} in top 0–20 cm soil (including both organic and mineral layers) and soil C stocks were comparable to those found in old woodlands (>400 years) after 110 years (Ashwood et al., 2019). In Germany, ancient beech forests (>230 years old) stored on average 47% more organic C in the soil than beech afforestations (50–128 years old) (Leuschner et al., 2014). At Rothamsted (UK), where arable land reverted to acid woodland after abandonment in 1886, soil C (to 70-cm depth) increased at a rate of 0.38 Mg C ha^{-1} yr^{-1} and more than doubled over 100 years (Poulton 1996).

The above reported rates of soil C changes are typical for temperate conditions. However, in warmer climates, mineral soil C may accumulate faster and without the initial lag period often reported under temperate conditions (Bárcena et al., 2014a; Bárcena et al., 2014b). For example, in a review of reforestation of abandoned tropical agricultural lands (Silver et al., 2000), soil C accumulated at an average rate of 0.41 Mg ha^{-1} yr^{-1} over a 100-year period, and at faster rates during the first 20 years (1.30 Mg C ha^{-1} yr^{-1}). In Ethiopia, afforestation of degraded croplands and grazing lands with *Eucalyptus* elevated soil C stocks to nearly 70% of levels found in a natural dry subtropical montane forest within 30 years (Assefa et al., 2017).

The specific agricultural land-use prior to afforestation is a crucial factor for soil C sequestration rates. While there is a general consensus that cropland-to-forest conversion eventually leads to higher soil C stocks, evidence from a large-scale synthesis (Poeplau et al., 2011) and site-specific studies (Ashwood et al., 2019), Ražauskaitė (2019) suggest that afforestation of grasslands and pastures results in very modest rates of soil C sequestration. Repeated surveys of afforested sites over the past 30 years indicated that permanent grassland conversion to forest was the only land use change that reduced soil C stocks in the 0–30 cm soil layer (Hannam et al., 2016). Afforestation of pastures and grasslands or Cerrado savannahs have also resulted in soil C losses (Zinn et al., 2002; Cook et al., 2014; Moore et al., 2018), although increases in soil C after afforestation of such land uses with *Eucalyptus* has also been reported (Maquère et al., 2008; Cook et al., 2014; Soares et al., 2019). The effect of grassland afforestation may be higher in drier climates as demonstrated in a study of grassland afforestation with *Eucalyptus* in subtropical areas (Argentina and Uruguay), where soil C was gained in areas with low annual rainfall and lost at sites with the highest annual rainfall (Berthrong et al., 2012). However, once the plantations reached an age of 40 years, soil C was steady or increasing at all sites, emphasizing the importance of controlling for stand age.

In northern Europe, many wet upland sites with thick organic peat layers have been afforested with conifers. This entails lowering of the water table through drainage and site preparation to enhance aeration, which increases rates of organic matter oxidation (Morison et al., 2012; Simola et al., 2012; Vanguelova et al., 2018). A net loss in soil C stock of 1.5 Mg ha^{-1} yr^{-1} was reported after afforestation of drained peatlands in Finland (Simola et al., 2012). Chronosequence studies (~100 years) in the UK of afforestation with Sitka spruce (*Picea sitchensis* (Bong.) Carr.) on moorland with peaty gley soils (Zerva and Mencuccini, 2005; Vanguelova et al., 2019), detected C loss from the peat layer during the first 30 years of the first rotation. This loss was compensated by C accumulation in the forest floor, such that overall C stock reached pre-afforestation levels after two forest rotations, e.g. after 100 years since afforestation (Vanguelova et al., 2019).

Most studies to date have investigated the changes of soil C in topsoil (0–30 cm depth), however, changes deeper in the profile may be important due to the large amount of soil C stored there (De Vos et al., 2015), and the potential for long-term C sequestration due to C stabilization. Positive but also negative changes in deeper soil C stocks (20–>60 cm) after afforestation have been reported at temperate and tropical sites (Shi et al., 2013). Over 40 years after afforestation, Mobley et al. (2015) observed that soil C increases in the light fraction from the topsoil (0–7.5 cm) were offset by significant losses in the subsoil silt- and clay-associated fractions (35–60 cm). Previous land use also influences subsoil soil C changes: conversions to forestry increase soil C from cropland and decrease soil C from grassland (Shi et al., 2013). In some cases, afforestation of former grassland increases soil C in deep soil layers (40–100 m soil depth), likely due to C inputs from tree roots (Ražauskaitė, 2019; Soares et al., 2019). Grasses have variable root systems but are generally shallower than those of trees in temperate forests (Canadell et al., 1996; Jackson et al., 1996).

There is mixed evidence regarding the stability of sequestered soil C after afforestation. After afforestation of grasslands, Ražauskaitė (2019) found more labile C in the topsoil of grassland than in afforested woodland in the UK (a 200-year chronosequence), but more stable C in deep soil layers in the woodland compared to the grassland. In contrast, in the Italian Alps, natural forest succession on abandoned grasslands led to a decline in soil C stability in the mineral soils, suggesting that soil C can become susceptible to management and environmental changes (Guidi et al., 2014). Rahman et al. (2017) found no evidence of changes in stability of soil C within 45 years of cropland afforestation in Denmark.

Grassland and cropland soils hold more soil C in the mineral horizons and in mineral-associated C fractions than forest soils, which could be less susceptible to environmental factors and more stable under a changing climate (Poeplau and Don, 2013). Soil C stabilization is influenced by the quality of the C inputs and the protection mechanisms that depend on soil chemical, physical and biological properties (Sollins et al., 1996). This highlights the need to study full soil profile soil C and individual soil C pools to determine vertical patterns of C distribution, allocation and stabilization in order to quantify soil C sequestration potential of afforestation.

2.1. Relevance and considerations

Several co-varying factors must be considered when evaluating effects of afforestation on soil C stocks. The rate and direction of soil C change following afforestation depend strongly on the previous land use, soil type, climate, tree species, forest age and management. Although gains in soil C are observed within decades of afforestation of

cropland, centuries may be required for soil C stocks to reach a new steady state. Soil C sequestration following afforestation is greater and more rapid in warm climates than in cold climates. In temperate and boreal zones, the initial C sequestration within the first three decades mainly occurs in the forest floor, whereas gains in mineral soil C stocks develop after a lag period of around three decades. The soil C sequestration rate is influenced by tree species (conifer–broadleaves), but this is mainly because of higher initial forest floor C sequestration rates under conifers. The previous land use has a major influence on soil C gains following afforestation – gains are more pronounced in frequently tilled croplands that have lower initial soil C stocks than pastures or grasslands (Laganière et al., 2010). The rate of soil C accumulation also varies with soil type. In a meta-analysis, Bárcena et al. (2014b) reported higher rates of soil C after afforestation of coarse-textured than fine-textured soils. There is some evidence that afforestation on organo-mineral soils could have a negative effect on soil C stocks during the first decades, depending on the site preparation practice, but may stabilize during the following decades and second rotation due to accumulation of C in forest floors.

2.2. Gaps in knowledge and research needs

Further studies are necessary to better quantify the afforestation impacts on deep soil C (below 30 cm) and on highly organic soils, as the few existing case studies have not provided conclusive results. More research on soil C fractions is required to provide information about the stability and the potential for long-term sequestration of soil C in forest ecosystems compared to other land uses. Reviews to date on the magnitude and direction of change of soil C stocks in organo-mineral soils after afforestation were inconclusive (Reynolds, 2007), and more case studies are needed encompassing a large range of climates, land-uses and soil conditions after afforestation of organic soils.

3. Conversion of primary forest to secondary forest or plantation

Primary forests are defined by FAO as naturally regenerated forest of native species where there are no clearly visible indications of human activities and the ecological processes are not significantly disturbed (Bernier et al. 2016). The operational use of primary and secondary forest for land classification is mostly used in tropical regions. In a meta-analysis of the impacts of land-use change on soil C in the tropics, conversion of primary forest to secondary forest being managed for wood extraction and planting of productive tree species caused a mean soil C loss of 7% or 9 Mg C ha^{-1} (over an average of 3 decades; Don et al. (2011)). The loss was mostly in the upper 20 cm of soil. Conversion of primary forests to secondary forests is often associated with a transitional stage of agricultural land use, especially in tropical regions. This land-use change has a much greater impact on soil C than does harvesting. For example, conversion of forest to agriculture caused a large decrease in soil C stocks within the topsoil (0–30 cm) (52% decrease in temperate regions, 41% decrease in tropical regions and 31% in boreal regions) (Wei et al., 2014).

Losses of soil C are more modest when primary forests are converted directly to managed forests. In six long-term monitoring sites across the Canadian boreal forest, Kishchuk et al. (2016) showed that soil C levels in harvested plots declined initially and rapidly converged over time to baseline levels, while plots subjected to a common natural disturbance (wildfire), took longer time to recover pre-disturbance soil C levels. Conversion of Cerrado woodland to *Eucalyptus* plantations in Brazil resulted in losses of 0.22 Mg C ha^{-1} yr^{-1} over two decades of observation (Cook et al., 2016), which was associated with declines in microbial biomass and loss of aged soil C, particularly in subsoils (James et al., 2019).

A modeling study by Dean et al. (2017) indicated that conversion of primary forest to rotation forestry could be associated with a long-term decline in soil C. Their analysis suggested that soil C was lost gradually, over centuries, once forests were converted, which could explain why short-term studies (< 20 years) of effects of clearcut harvesting on soil C have provided conflicting conclusions. Once forests were converted, the rate of soil C losses with each harvest declined (Dean et al., 2017). However, studies documenting the long-term patterns of soil C accumulation in the absence of natural or anthropogenic disturbances have shown diverging results. Some studies have reported net soil C accumulation that goes beyond the aboveground aggradation phase (Zhou et al., 2006; Luyssaert et al., 2008; Andrieux et al., 2018) while others report a steady-state level of soil C stocks at a point in time (Wardle et al., 2004; Ward et al., 2014; Gao et al., 2018). As illustrated by Senez-Gagnon et al. (2018), short-term accumulation of soil organic matter following disturbance typically shows a U-shaped curve. It is often difficult, however, to predict whether the long-term pattern of soil C accumulation, following this U-shaped curve, is a steady state or a slow continuous accretion because changes are slower in old-growth stands than in aggrading stands. Noormets and Nouvellon (2015) explored the underlying causes of the lower soil C stocks in managed compared to primary forests found in some studies. They found that globally, managed forests are about 50 years younger, include 25% more coniferous stands, and have about 50% lower C stocks than unmanaged forests. Gross primary productivity (GPP) and total net primary productivity (NPP) were similar, but relatively more of the assimilated C was allocated to aboveground pools in managed forests, whereas allocation to fine roots and rhizo-symbionts was lower.

3.1. Relevance and considerations

The conversion of primary forest is possible only where such forests remain, although restoration of degraded forests can assist in rebuilding soil C stocks. The benefit of retaining primary forest for soil C depends on the natural disturbance regime; where disturbance such as wildfire is frequent, for example in the boreal biome where a large portion of global primary forest area is located (Bernier et al., 2017), benefits for soil C will be smaller. The benefit also depends upon what the forest is being converted to; detrimental effects of conversion to managed forest or even monoculture plantations are less than from conversion to row-crop agriculture. The impact of converting primary forests to secondary forests may be greater if primary forests are first converted to an agricultural land use. Nave et al. (2019) found greater soil C losses associated with harvesting on afforested sites than on secondary forest sites.

Well-managed secondary forests can have higher productivity than primary forests and so may sequester more atmospheric CO_2 (Turner et al., 2017). Managed forests also provide wood products and biofuels that can serve as long-term C stores, depending on their end use, and substitute for C-rich fossil products (Soimakallio et al., 2016; Timmons et al., 2016; Laganière et al., 2017b). Active management of forests allows for better control of C stocks, because forest dynamics are less influenced by natural disturbances.

Primary forest may provide less direct economic benefit compared with conversion to agriculture or commercial forestry. However, protection of remaining primary forests can provide additional ecosystem services such as conservation of biodiversity, water supply and quality, recreational and welfare benefits, biological heritage and potential for an ecotourism industry.

3.2. Gaps in knowledge and research needs

There is a lack of consistency in the way that different countries define their primary forest area. In fact, most countries do not directly identify or distinguish primary forests from other forests in their national forest inventories. This makes assessing the impact of converting primary forest on soil C difficult (Bernier et al., 2017). Furthermore, certain regions, notably the boreal zone, are subject to frequent natural disturbances, such as wildfire and insect outbreaks that potentially

affect soil C dynamics.

A clear definition of baseline information on what is a primary forest would help to better frame this issue (Bernier et al., 2017) and whether it should refer to an undisturbed forest, or a forest undergoing a natural disturbance regime. Various results have been found on the long-term trajectories of soil C in the absence of disturbance and whether this reservoir saturates or continues accretion (reviewed in Andrieux et al. (2018), Reichstein et al. (2009)).

4. Harvesting

Clearcut harvesting represents the most common forest harvesting practice worldwide, with generally negative consequences for soil C stocks. Clearcut harvesting results in reductions of < 10% of the soil C in the entire soil profile with greatest loss of the forest floor (Johnson, 1992; Johnson and Curtis, 2001; Achat et al., 2015b). In a meta-analysis of studies in temperate forests, forest harvesting reduced total soil C by an average of 8%: C storage declined by 30% in the forest floor, whereas the mineral horizons showed no significant overall change (Nave et al., 2010). Forest floor C storage losses were greater in hardwood forests (−36%) than in coniferous or mixed forests (−20%) (Nave et al., 2010). In a meta-analysis of 112 publications from around the world, forest harvesting reduced soil C stocks by an average of 11.2% with greatest losses occurring in organic horizons (-30.2%; James and Harrison (2016)). Significant losses also occurred in top soil (0–15 cm depth; −3.3%) and deep soil layers (60– >100 cm; −17.7%). Chronosequence studies and meta-analyses suggest that soil C stocks in the forest floor and mineral soil start to recover 1 to 5 decades following harvest (Sun et al., 2004; Tang et al., 2009; Nave et al., 2010; Achat et al., 2015b; James and Harrison, 2016).

Partial harvesting methods such as continuous cover, variable retention, selection cutting and careful logging that retain living trees may reduce soil C losses associated with forest harvest. Strukelj et al. (2015) reported that 9 years following harvesting of boreal aspen stands, clearcut areas were a net C source, while partially harvested areas were a net C sink. In Norway-spruce-dominated stands in Austria, single-tree-selection management resulted in 11% greater soil C stocks in the upper mineral soil compared to conventional age-class management (Pötzelsberger and Hasenauer, 2015). Shelterwood cuts generated only short-term losses of soil C in the Lenga forest of the Chilean Patagonia (Klein et al., 2008). In an oak-hardwood forest in New England, Warren and Ashton (2014) reported a decrease in the soil C stocks in the mineral soil, but neutral effects in the litter layer following shelterwood harvest. However, others have found little or no difference between effects of partial, selection, shelterwood, and clearcut harvesting on soil C stocks (Hoover, 2011; Christophel et al., 2015; Puhlick et al., 2016).

Soil C losses following clearcut harvesting can principally be related to reduced C inputs (*i.e.* litter) and/or faster decomposition. Higher insolation and warmer, more favourable soil microclimatic conditions have been suggested to stimulate microbial respiration after canopy removal (Pumpanen et al., 2004; Morehouse et al., 2008; Kulmala et al., 2014; Mayer et al., 2017b). However, it has also been demonstrated that enzymatic processes involved in the breakdown of organic matter and litter decomposition can be unaffected or even decrease following clearcutting (Prescott, 1997; Prescott et al., 2000a; Cardenas et al., 2015; Kohout et al., 2018). Lower enzymatic activity was related to ceased rhizodeposition from tree roots and changes in the soil microbial community (Kohout et al., 2018), and lower moisture conditions in soil surface layers have been suggested to reduce litter decomposition rates (Prescott, 1997; Prescott et al., 2000a). Accelerated erosion, leaching and avalanches may also contribute to reduced on-site soil C stocks following forest harvesting (Katzensteiner, 2003; Jandl et al., 2007), but the translocated C may be buried/sequestered somewhere else (Hoffmann et al., 2013)

4.1. Relevance and considerations

Forest harvesting is practiced around the globe, but specific strategies vary among countries, regions and landowners. The impacts on soil C depend on the degree and intensity of soil disturbance associated with particular harvesting methods (and even individual operators), as well as soil moisture at the time of harvesting, soil type, and tree species. Impacts may be ameliorated by extending harvest rotations (Law and Waring, 2015; Noormets and Nouvellon, 2015), maintaining harvesting debris on site (Jandl et al., 2007), and minimizing soil disturbance (Achat et al., 2015b). Harvesting effects on soil C stocks can be substantially increased from machinery-induced soil disturbance (James and Harrison, 2016). These negative effects may be alleviated by choosing harvesting methods that disturb the soil as little as possible (e.g. harvesting during winter when soils are frozen or snow-covered, hoe-forwarding, CPRS (cut with protection of regeneration and soil; in Québec) and CLAAG (careful logging around advanced growth; in Ontario, Canada). Minimizing disturbance of forest soils can increase the rate at which soil C stocks are replenished following harvest (Laganiere et al., 2010). Pre-treatment and post-treatment strategies are also important considerations for maintaining soil C following harvest; practices such as blading/tilling and broadcast burning result in greater C losses (Jandl et al., 2007; Nave et al., 2011; James and Harrison, 2016).

4.2. Gaps in knowledge and research needs

Despite the consistent overall effects of harvesting on soil C documented by recent meta-analyses, site factors may lead to substantial differences in the results of individual studies. These factors include soil type, climate, time since harvest, sampling depth, harvesting practice, and tree species. Some soil types have much more coverage in the literature than others; 66% of the observations (497/746) in the meta-analysis of James and Harrison (2016) were in just three soil orders — Alfisols, Spodosols, and Ultisols (USDA taxonomy; Luvisols, Lixisols, Podzols, Acrisols, and Alisols in WRB taxonomy) — while 15% had no soil type specified. Furthermore, soil C change following harvest takes place over decades if not a century (Achat et al., 2015b; James and Harrison, 2016), but most studies examine soil C change within 15 years of harvest. Creating and maintaining long-term research sites across a range of soil and forest ecosystem types is necessary to address this gap (Clarke et al., 2015). There is much greater uncertainty in the effects of forest harvest on C in deep soil horizons due to a paucity of research. Examining deep soil C effects remains a major research need in the forest C cycling literature. Finally, an understanding of the mechanisms underlying soil C losses following harvest is far from complete. Particularly the interplay of abiotic (e.g. climate) and biotic (e.g. microbes) effects on decomposition processes and soil C losses following harvesting requires deeper understanding.

5. Removal of harvest residues

Forest harvest residues are a mixture of tree components with a low merchantable value that are left on-site after harvesting. Harvest residues consist of leaves/needles, branches, twigs, low-quality or small-diameter stems, bark, dead wood and roots. The current demand for renewable energy sources (e.g. fuelwood) has increased interest in utilization of forest harvest residues. Biomass currently represents by far the largest renewable energy source (IPCC, 2011) and most IPCC pathways limiting global warming to 1.5 °C incorporate increased used of biomass for energy (de Coninck et al., 2018). Whole-tree harvesting (WTH), stem-only harvesting (SOH), stemwood-only harvesting (stem de-barking on site - S_wOH), and stump harvesting are the most common harvesting practices used in production forestry. These practices differ in machinery requirements, and in the amount and type of residues that are removed or retained on the site. Stump harvesting is the most intensive harvesting practice as it causes additional soil disturbance and

reduced root litter input to soil. Although root and stump harvesting have not been widely adopted, they have been practiced in Sweden, Finland and the UK to generate bioenergy stock (Melin et al., 2010; Moffat et al., 2011) and to reduce the risk of diseases after planting (Vasaitis et al., 2008; Moffat et al., 2011; Cleary et al., 2013). Stumps and coarse roots are also commonly removed in rubber (*Hevea brasiliensis*) plantations to reduce the occurrence of white root disease (Vrignon-Brenas et al., 2019).

The removal of harvest residues from the forest site has implications for soil C stocks, so the actual net C balance of replacing fossil fuels with forest harvest residues for energy production needs to account for these possible changes. Meta-analyses investigating the effects of forest harvest residue removal on soil C stocks have shown diverging results ranging from a decrease of soil C by 7.5% in mineral soil after 10–30 years of stem-only harvests (Achat et al., 2015a) to no effects (Clarke et al., 2015; Hume et al., 2018). The forest floor or organic horizon are the most affected by forest harvest residue removal. Johnson and Curtis (2001) found that WTH led to a decrease (−6%) in soil C stocks whereas an increase was found with SOH (+18%). Achat et al. (2015b) found that removing harvesting residues led to significant losses of soil C stocks in the forest floor (10% to 45%) and even > 20 cm deep soil layers (10%). This meta-analysis also showed that exporting harvest residues has a greater impact in temperate than in cold (boreal) forests (Achat et al., 2015b). Forest-floor C stocks also declined with increasing harvest intensity (-24% under WTH). Exporting harvest residues resulted in an average loss of 11% of entire soil profile soil C. Other meta-analyses (Clarke et al., 2015; James and Harrison, 2016; Hume et al., 2018) as well as reviews (Johnson and Curtis, 2001; Thiffault et al., 2011; Clarke et al., 2015) did not find clear evidence of a general reduction in soil C following the removal of forest residues. In addition, 14 experimental sites of the Long-Term Soil Productivity (LTSP) network in Canada (Morris et al., 2019) or in Europe (Olsson et al., 1996; Walmsley et al., 2009) did not find clear effects of residue removal on soil C stocks up to 20 years following harvest. In contrast, in second-rotation Sitka spruce forests on peaty soils in the UK, soil C stocks in both organic and mineral soil were higher under WTH compared to SOH after 28 years due to higher mineralization of the peat under brash compared to areas where brash had been removed (Vanguelova et al., 2010). In boreal and northern temperate forests, WTH generally leads to either no significant difference or a small reduction in soil C compared with SOH, most often in the organic layer (Clarke et al., 2015). Nevertheless, very high soil C losses with WTH have been reported under specific conditions; in planted Eucalyptus forests in Congo and Brazil, successive WTH over multiple (>2) rotations led to a decrease in soil C stocks up to 50% in the 0–5 cm soil layer compared with S_wOH (Epron et al., 2015; Rocha et al., 2018). Negative effects appeared to be more pronounced in sandy than in clayey soils (Oliveira et al., 2018). A meta-analysis by Wan et al. (2018) showed that site properties influence the susceptibility of soils following residue removal; while soil C increased by about 7% following SOH compared with WTH in coarse- and medium-textured soils, differences between the two residue management practices were not significant in fine-textured soils. Most field studies of stump harvesting on mineral soils have found either no reduction in soil C stocks (Strömgren et al., 2013; Jurevics et al., 2016), or only a small decline (Hyvönen et al., 2016; Kaarakka et al., 2016; Vanguelova et al., 2017). However, stump harvesting caused a 24% reduction in soil C stock in a temperate forest in Washington, USA (Zabowski et al., 2008). In central Sweden, stump harvested sites showed significantly lower soil C pools in the humus layer compared to clearcut sites where patch scarification was applied (Persson et al., 2017). The impacts of stump harvesting on soil C seems to be greater in organic soils; on highly organic soils in Wales, for example, up to 50% of total soil C in 0–80 cm of the peat was lost during the first four years after stump harvesting (Vanguelova et al., 2017).

5.1. Relevance and considerations

Governments and non-governmental entities have developed a range of governance tools, such as policies, regulations, certification schemes, national guidelines and practical guides, to ensure that forest biomass harvesting is sustainable (Stupak et al., 2007). The impact of removing harvest residues on soil C stocks varies with climate, soil type, and forest management practices and these are central in all available tools and guidelines. Some guidelines are based on soil types and their sensitivity to biomass harvesting in terms of C loss amongst other risks (Evans et al., 2013). However, the mechanisms explaining how harvest residues are converted into soil C and how we can promote the transfer of C from harvest residues to the soil are not clear. Harvest residue removal restrictions seem to be more meaningful and thus should be applied to poor sites, short-rotation forestry, and intensively managed forestry. Mitigation measures such as fertilization and wood ash application may be needed for sites that are most sensitive to harvest residue removal. Soil C losses related to the removal of harvest residues is argued to be negligible in comparison with the greenhouse mitigation benefit of avoided fossil-fuel emissions (Cowie et al., 2006). Proponents of stump harvesting also point out that stumps left to decay on site would ultimately be transformed into CO_2. Stump extraction is potentially confined to sites: 1) with root systems large enough to make the operation worthwhile, 2) accessible to heavy machinery, and 3) with mineral soils that are less sensitive to soil C loss and sufficiently light to allow easy root extraction.

5.2. Gaps in knowledge and research needs

Research is needed to more clearly identify sites and practices at risk of soil C depletion with harvest residue removal. The mechanisms of soil C storage and how they are impacted by the environmental effects of harvest residue removal need to be better understood. Harvesting residues can, for example, influence microbial communities (Zhang et al., 2018c; Mushinski et al., 2019) and soil microclimate (Roberts et al., 2005; Devine and Harrington, 2007), and therefore indirectly influence soil C stocks, but this link has yet to be investigated. Changes in soil C as result of harvest residue management may occur first in labile C pools (Lajtha et al., 2014; Rocha et al., 2018). Thus, future studies should consider the fractionation of organic matter in labile and recalcitrant pools to offer insights into soil C quality and stability changes. The intensity of harvesting might also result in shifts in organic matter chemistry as residues are a mix of chemically different materials, e.g., different C to N ratios and lignin content. This has potential implications to soil C residence time, however, there have been very few studies on this topic. Efforts to sequester soil C by managing litter inputs are unlikely to increase total soil C stocks over short timeframes. Studies evaluating harvest residue management across multiple rotations and along climate and soil type gradients are needed, particularly in tropical forests. Few data are available on the long-term responses of harvest residue manipulation in tropical forests compared to temperate or boreal forests, which hampers proper comparisons (Achat et al., 2015b). Finally, studies of harvest residue impact on soil C is usually confined to the upper soil layers. However, deep soil layers can also be affected, particularly if root and stump harvesting is adopted, so future studies should consider the implications of harvest residue management for deep soil C (Harrison et al., 2011; James and Harrison, 2016; Gross and Harrison, 2019). Isotopic studies in the field could be useful to gain insight into the effect of harvest residue management practices on C dynamics in deep soil layers where changes in total C contents are difficult to measure (Balesdent et al., 2018).

6. Soil disturbance from site preparation

Intentional soil disturbance is a common form of site preparation used in forestry in order to improve regeneration success. It promotes

the growth and survival of tree seedlings by removing competing vegetation, improving soil temperature, moisture or aeration, increasing nutrient availability, and reducing potential damaging effects by insects (e.g. weevils) and small mammals (Schmidt et al., 1996; Jandl et al., 2007; Van Miegroet and Olsson, 2011; Löf et al., 2012; Mjöfors et al., 2017). Mechanical site preparation encompasses a variety of soil cultivation practices with different intensities of soil disturbance, including scarification from disc-trenching (blade-scarification), pit-mounding, plowing and bedding. Scarification involves removing the pioneer vegetation and the uppermost organic soil layer. Disc-trenching/harrowing creates continuous furrows where the organic layer is removed and turned over to form ridges (Löf et al., 2012; Piirainen et al., 2015). Mounding creates deep furrows, either continuous (bedding, plowing) or in the form of pits and elevated mounds with an inverted or mixed soil layer. Most knowledge on effects of soil disturbance comes from agriculture, where continuous soil disturbance via plowing plays a significant role in the loss of soil C (Lal, 2004; Ogle et al., 2005). Management practices that minimize soil disturbance lead to the accumulation of soil C (Six et al., 2006; Powlson et al., 2014).

Intentional disturbance of forest soils through site-preparation practices can cause substantial soil C losses (Walmsley and Godbold, 2010). Several studies that compared different site-preparation methods found that the loss of soil C increased with the intensity of the soil disturbance (Johansson, 1994; Schmidt et al., 1996; Mallik and Hu, 1997). Sandy soils are particularly sensitive to soil disturbance (Carlyle, 1993). When combined with herbicide application for brush control (*i.e.* removal of pioneer vegetation) in Canadian conifer forests, blade scarification resulted in a 2–3 fold reduction in soil C (Burgess et al., 1995). Scarification resulted in a roughly 50% soil C reduction in Ponderosa pine (*Pinus ponderosa*) stands in the US 24 years after application (Esquilín et al., 2008). Along dwarf-bamboo (*Sasa* sp.) chronosequences in Japan, scarification resulted in a significant reduction in the soil C stocks, an effect which was present even after 35 years (Aoyama et al., 2011). Restricting sampling to the uppermost soil layer may exaggerate the effects of disturbance as they are usually most pronounced in the forest floor (Piirainen et al., 2015); soil C can moreover be translocated, buried and stabilized with depth as found by Swain et al. (2010). Significant reductions in total soil C contents were reported 60–70 years after mechanical site preparation (Örlander et al., 1996), but the changes were small when soil C was measured to a depth of 1 m and so would have included the buried organic matter (Prescott et al., 2017). Schmidt et al. (1996) found lower soil C in site-prepared, but the difference was significant only in microsites such as the trench bottom from which the organic layer had been displaced. In Swedish conifer plantations Nordborg et al. (2006) found significantly lower soil C stocks in humus layers when comparing deep-soil trenching (~50 cm deep) and shallow patch scarification (~5 cm deep); however, when comparing the whole soil profile, no differences in soil C were found between the treatments. In 20-year-old conifer plantations in Canada, blade-scarification resulted in 54% lower soil C stocks in the forest floor, while mineral soil C stocks kept rather unaffected (Maillard et al., 2010). In wetland soils, intensive site preparation is often required to create the desired environment for tree establishment, including lowering of the water table through drainage and ground preparation such as mounding, bedding or plowing. All practices enhance aeration, organic matter oxidation and soil C loss (Morison et al., 2012; Pitkänen et al., 2013; Vanguelova et al., 2018). Increased occurrence of fire after drainage further contributes to soil C loss following drainage of peatlands (IPCC, 2014).

6.1. Relevance and considerations

The negative effect of soil disturbance from site preparation on soil C stocks is expected to be overridden by enhanced tree growth and increased C input to soil, such that the long-term effect of site preparation may be reduced (Jandl et al., 2007; Mason et al., 2009; Trettin et al., 2011; Hommeltenberg et al., 2014; Mjöfors et al., 2017). In boreal forests, for example, mounding and disc-trenching increased tree biomass and total ecosystem C stocks (Mjöfors et al., 2017). Assessment of site preparation practices, particularly drainage, should consider fluxes of major greenhouse gases, as water table depth strongly impact CO_2, CH_4, and N_2O emissions (Levy et al., 2012; Ojanen et al., 2013; Yamulki et al., 2013; Vanguelova et al., 2018). Drainage of highly organic peatlands for afforestation usually increases CO_2 emissions from soil, and emissions increase with depth of drainage (Haddaway et al., 2014; IPCC, 2014).

6.2. Gaps in knowledge and research needs

Soil disturbance from site preparation can translocate soil C down the soil profile, but the rate of decomposition of this surface organic matter when buried in mineral soil at depth is unknown. Its potential stabilization mechanisms depend on the site preparation practice, forest type and soil type. Overall, the reported effects of disturbance on soil C do not distinguish between those due to ground preparation, drainage or displacement of the organic layer horizontally and vertically within the soil profile. Such information is needed to underpin best management practices and guidance for soil protection and soil C storage. Quantification of the loss of soil C from wet peat soils by different ground preparation techniques is rarely reported in the literature, so there is considerable uncertainty in estimates of the full C balance in forested peatlands. Furthermore, short-term changes can be misleading in interpreting the long-term effects of drainage on peat C balances (Hommeltenberg et al., 2014). Thus, studies of long-term effects of drainage are needed.

7. Nitrogen addition

Increased stocks of soil C are often encountered in forests amended with nitrogenous fertilizers or simulated nitrogen (N) deposition (de Vries et al., 2009; Janssens et al., 2010). In a meta-analysis of the impacts of elevated N inputs (including N fertilisation) on the storage of C in forest soils based on 72 experimental sites, Nave et al. (2009) found that N inputs increased total soil C stocks (combined forest floor and mineral soil) by 7.7%. Stocks of organic C increased predominantly in the mineral soil (by 12.2%). In the review by Johnson and Curtis (2001), N fertilization was the only forest management practice that had a clear positive effect on the soil C pool. Greater accumulations of humus are often noted following N fertilization of boreal forests (Nohrstedt, 1990; Mälkönen and Kukkola, 1991; Mäkipää, 1995; Olsson et al., 2005) and simulated N deposition in temperate forests (Lovett et al., 2013), as have greater soil C concentrations in mineral soil (Pregitzer et al., 2008; Cusack et al., 2011; Huang et al., 2011). Added N may also increase accumulation of C in occluded particulate organic matter (Zak et al., 2017). Increased mineral-associated C stocks in response to N fertilization have also been reported in temperate and tropical forests, even in the absence of a detectable increase in bulk soil C (Hagedorn et al., 2003; Cusack et al., 2011).

The mechanisms through which N addition to forests increases amounts of soil C include increased litter input and reduced decomposition. In forests in which primary production is limited by low N supply, increased production of aboveground biomass and litter increases C input to soil (Huang et al., 2011), but increases in soil C have been noted in the absence of increased production (Pregitzer et al., 2008; Cusack et al., 2011; Frey et al., 2014). Additional N appears to reduce rates of late-stage decomposition of soil organic matter (Berg et al., 1987; Berg and Matzner, 1997; Knorr et al., 2005) by suppressing the activity of lignin-degrading enzymes such as peroxidases (Fog, 1988; Carreiro et al., 2000; DeForest et al., 2004; Frey et al., 2014). A meta-analysis by Chen et al. (2018) showed that increased soil C associated with N additions across a range of ecosystems was consistently predicted by decreased production of lignin-modifying enzymes.

Increased soil C and selective preservation of a range of plant-derived compounds including lignin-, cutin- and suberin-derived compounds was observed in a temperate forest treated with high N inputs (100 kg N ha^{-1} yr^{-1}) over two decades; (Wang et al. 2019). Craine et al. (2007) suggested that lignin-oxidizing enzymes are suppressed under conditions of abundant inorganic N because these enzymes are usually employed in order to 'mine' N from organic matter. Chemical binding of ammonium and amino N to phenolic compounds in humus may also render it more recalcitrant (Nõmmik, 1970; Janssens et al., 2010).

Recognition of the centrality of the soil microbial biomass and microbial products and residues in generating soil organic matter (Liang and Balser, 2011; Wiesmeier et al., 2013; Kallenbach et al., 2016; Paul, 2016) suggests another mechanism behind the increase in soil C following N addition. Additions of N can increase N concentrations (*i.e.*, reduce C:N) of soil microbes (Li et al., 2014), which would generate more of the N-rich microbial products that generate stable soil organic matter. Microbial biomass is rich in N: the average C to N ratio of soil microbial biomass is 7 to 9 (Cleveland and Liptzin, 2007; Xu et al., 2013; Xue et al., 2019), while the average C:N ratio of plant residues is > 20. The C:N ratio is 10–15 for fungi and is about 5 for bacteria (Paul, 2016). Soil organic matter is also rich in N; nitrogenous compounds comprise approximately 20–35% of soil organic matter (Bremner and Hauck, 1982; Haddix et al., 2011; Paul, 2016). Soil organic matter has an average C:N ratio of 10 to 13, and when the plant residues in the light fraction and particulate soil organic matter are removed, the ratio is 8 to 10 (Paul, 2016), quite like that of the microbial biomass. Turnover of the microbial biomass releases microbial products, some of which (e.g., peptidoglycans) are N-rich. Proteins and amino acids are directly adsorbed to clay minerals (Sollins et al., 2006; Nannipieri and Eldor, 2009; Yuan and Theng, 2012), and are thought to form a stable inner core to which other organics are sorbed (Kleber et al., 2007; Paul, 2016).

7.1. Relevance and considerations

Addition of N is not advisable in ecosystems where N is plentiful due to atmospheric N deposition or previous agricultural use, as it could stimulate losses as nitrate in water or as greenhouse gases through denitrification (Gao et al., 2015). In degraded soils with low organic matter and clay contents, N would be better added in organic forms such as composts or municipal biosolids that would increase retention of the N in the soil (Larney and Angers, 2012). Given that equivalent soil C gains are achievable through incorporation of N-fixing tree species (Nave et al., 2010), this may be preferable to chemical fertilizers in many situations.

The potential benefits of N fertilization for increasing tree growth and soil C stocks must be weighed against the associated environmental costs, as the production, transport and application of synthetic fertilizers all entail fossil fuel combustion and emission of CO_2. When N is chronically applied, fundamental changes in soil C cycling due to changes in microbial biomass, enzyme expression, and soil C composition could reduce or alter the cycling of other nutrients (Wang et al., 2019). Barriers to implementation include costs of fertilization, opposition to use of synthetic fertilizer on public lands and public concerns over potential eutrophication of drainage waters, although N fertilizer in forestry generally leads to small and transient increases in N concentrations in stream water (Binkley et al., 1999; Smethurst, 2010).

7.2. Gaps in knowledge and research needs

Soil organic matter remains enigmatic with respect to its chemical nature, although significant insights have been gained recently. An improved understanding of the forms in which N is found in soil organic matter of various stability classes would assist in devising ways of generating more stable forms of soil C. An improved understanding of the mechanisms through which N addition generates greater soil C stocks would help in better predicting the sites on which the benefits would be greatest or most likely. Linkages between the changes in the composition and abundance of mycorrhizal fungi reported after N fertilization, and the amount and composition of soil C should be explored. In some situations, forests are fertilized with both N and P due to co-limitation or secondary limitations, and it is not known if soil C dynamics would be similar in this situation.

8. Selection of species with nitrogen-fixing associates

Many studies show that trees with N-fixing root associates (hereafter referred to as N-fixing species) change soil properties more rapidly than other species, with consistent increases in stocks. In a *meta*-analysis for north-temperate forests, Nave et al. (2009) reported a significant increase (+12%) in mineral soil C storage in response to N-fixing vegetation. Analyzing 19 case studies with N-fixing species of *Alnus* and *Ceanothus* in temperate forests and *Leucaena*, *Falcataria* and *Casuarina* in the tropics, Binkley (2005) showed a mean rate of C accretion in soils of 87 g C m^{-2} yr^{-1} relative to non-fixing tree species. Inclusion of N-fixing *Acacia* trees into plantations of *Eucalyptus* can be effective at increasing soil C stocks after a single rotation (Forrester et al., 2013; Koutika et al., 2014; Voigtlaender et al., 2019). Nitrogen-fixing trees increase soil C stocks much faster than other species on degraded soils such as post-mining sites (Frouz et al., 2009), eroded soils (Zhang et al., 2018a), or after afforestation of savannas (Tang and Li, 2013). Afforestation with N-fixing species can also be used on degraded soils to improve the fertility to a level where more demanding tree species can be planted. For example, Dipterocarps have been grown in gaps of *Acacia* trees in the tropics (Norisada and Kojima, 2005). Finally, N-fixing plants, grown in the understory or intercropped (Watt et al., 2003), can improve the ecosystem nutritive status (Prietzel et al., 2008) and in some case the soil C stocks (Vidal et al., 2019).

The mechanisms driving C accretion in soils in response to repeated N fertilizer additions are probably also involved in the enhancement of soil C stocks under N-fixing trees. However, studies comparing N-fixing stands with adjacent repeatedly fertilized stands of non-fixing trees reported that soil C in the mineral soil is generally higher under N-fixing trees than in N-fertilized stands (Binkley et al., 2004; Nave et al., 2010; Forrester et al., 2013), which suggests that additional mechanisms could enhance soil C accretion in forests with N-fixing trees. However, the underlying mechanisms were not fully understood. Isotopic studies at four tropical sites on three soil types showed that the increase in soil C under N-fixing trees was due to both gain of new soil C and reduced loss of old soil C (Resh et al., 2002). Rapid changes in soil microbial communities have been shown after planting N-fixing trees in eucalypt plantations (Rachid et al., 2013; Pereira et al., 2019), including in very deep soil layers (Pereira et al., 2017).

On N-poor soils, the higher biomass production of N-fixing trees relative to non-fixing trees probably contributes to increasing soil C stocks (Epron et al., 2013; Forrester et al., 2013). Higher biomass production in forests including N-fixing trees can also result from an increase in the availability of soil phosphorus (Giardina et al., 1995), even though this positive effect is not general (Binkley et al., 2000; Koutika et al., 2016). Actinorhizal N-fixing trees can accelerate rock weathering, and thereby enhance their access to multiple rock-derived nutrients, thus lowering the limitations for C uptake and storage (Lambers et al., 2019; Perakis and Pett-Ridge, 2019). In Brazil, mixing *Acacia mangium* and *Eucalyptus grandis* trees increased fine root biomass and led to shifts in C allocation from above- to belowground, and from growth to litter production, which may promote soil C accretion (Nouvellon et al., 2012; Laclau et al., 2013). Higher detrital inputs were also found belowground in pure *Falcataria* stands relative to *Eucalyptus* stands in Hawaii, which was involved in the enhancement of soil C stocks (Binkley, 2005).

8.1. Relevance and considerations

A positive effect of N-fixing species on soil C stocks is well documented, which suggests that including N-fixing species in forests could contribute to sequestering C in soil. Because N-fixing trees are more abundant in subtropical and tropical climates (Menge et al., 2017; Steidinger et al., 2019), the opportunities for mixing N-fixing plants with other tree species are more common at low latitudes, although the abundance of N-fixers at mid- or high latitude may increase over the next decades due to climate change (Liao et al., 2017). However, native N-fixing tree species are not among the commercial species in many regions and some drawbacks of N-fixing species have been pointed out. For example, a theoretical model suggested that N-fixing trees could either mitigate or exacerbate climate change relative to other species, depending on whether the enhanced CO_2 sequestration outweighs potentially enhanced nitrous oxide N_2O emissions from soil (Kou-Giesbrecht and Menge, 2019).

The introduction of N-fixing species outside of their natural ranges carries the risks associated with introduction of any non-native species. Negative impacts of invasive N-fixing species have been reported in tropical and subtropical rangelands around the globe (Vitousek et al., 1987; Richardson et al., 2011), but awareness of the consequences of the rapid expansion of N-fixing species in cool climates is more recent (Hiltbrunner et al., 2014). Changes due to N-fixing species can be similar to those of anthropogenic atmospheric N deposition, including declines in biodiversity, soil acidification, and leaching of nitrate and cations (Van Miegroet and Cole, 1984; Compton et al., 2003) and N_2O emission. Indigenous species are generally preferable to exotics because the competitive advantage of N-fixing species can make them invasive, such as *Robinia pseudoacacia* in central Europe (Vítková et al., 2017) or *Acacia* sp. in tropical and subtropical regions (Richardson et al., 2011; Aguiar et al., 2014).

Exotic N-fixing tree species (including *Robinia pseudoacacia* and *Acacia* sp.) are used in many areas to meet the needs of people without major risk of invasion (Richardson et al., 2011). Furthermore, in some cases, native pioneer or invasive alien N-fixing tree species facilitate the recovery of natural forests on deforested and degraded soils, allowing the establishment and growth of more demanding tree species, and the progressive recovery of forest species diversity across several successional stages (Yeo and Fensham, 2014; Geldenhuys et al., 2017; Root-Bernstein et al., 2017). However, these positive effects of N-fixers on forest regeneration are not universal (e.g. Taylor et al. (2017)) as the balance between facilitative versus inhibitory effects of N-fixers depends on several site-specific factors including climate and soil nutrient availability.

8.2. Gaps in knowledge and research needs

The mechanisms accounting for the general trend of C accretion in soils under N-fixing trees are not fully understood and long-term field studies are needed in contrasting environments to disentangle the consequences of enhanced tree growth, increased C allocation belowground and reduced loss of old soil C. The mechanisms driving N_2O emissions under N-fixing trees also deserve more attention to identify the conditions under which positive climate mitigation effects of the introduction of N-fixing trees on soil C may be countered by large N_2O emissions.

9. Tree species selection

Tree species selection is a well-known management lever for foresters, and in recent decades it has also been discussed as a means of sequestering C in soils (Jandl et al., 2007). Differences between coniferous and broadleaved tree species have been reported in the rate of soil C accumulation, the distribution of soil C between forest floor and mineral soil, and the stability of soil C. According to a *meta*-analysis, the average increase in soil C 2–3 decades following afforestation with broadleaf tree species was 25%, compared with 2% with conifers (Laganiere et al., 2010). Soil C stocks in the forest floor are generally greater under conifers than under broadleaved species (Augusto et al., 2003; Vesterdal et al., 2013; Boča et al., 2014; Augusto et al., 2015), while larger mineral soil C have been reported under broadleaf angiosperm species (Vesterdal et al., 2008; Vesterdal et al., 2013). In temperate mixed deciduous forests in USA, stands dominated by ectomycorrhizal (ECM) species contained more soil C in topsoil (forest floor and 0–10 cm), but stands dominated by arbuscular (AM) species contained more soil C between 10 cm and 1 m depth (Craig et al., 2018). Differences in total soil C stocks over the entire soil profile are often insignificant among conifers and broadleaf angiosperms (Vesterdal et al., 2008; Boča et al., 2014; Gahagan et al., 2015).

The stability of soil C in the mineral soil also appears to be greater under certain broadleaved tree species, particularly those associated with AM, and rapidly decomposing leaf litter (Wiesmeier et al., 2013; Laganière et al., 2017a; Soucémarianadin et al., 2018). The mechanisms appear to be greater C incorporation and stabilization in mineral horizons under these species (Wiesmeier et al., 2013; Augusto et al., 2015), related at least partly to the more abundant soil macrofauna communities under these tree species (Frouz et al., 2013; Schelfhout et al., 2017). A common garden study by Angst et al. (2019) revealed that soil C stability varied substantially among tree species, and this variability was independent of the pool of soil C. The stability of soil C was highest in species with high N concentrations and low amounts of acid-insoluble compounds in their roots, and lowest in species with high calcium tissue concentrations.

The greater accumulation of soil C in forest floors under conifer species can be attributed to slower decomposition that, in turn, is the consequence of different litter quality and soil functioning (e.g. Augusto et al. (2003), Augusto et al. (2015), Maes et al. (2019), Berg et al. (2015), Russell et al. (2007)). Aboveground litterfall flux is not species-dependent (Augusto et al., 2003; Vesterdal et al., 2008; Hansen et al., 2009; Augusto et al., 2015), and there is a paucity of data on belowground C fluxes associated with root turnover and soil biota to explain the development of mineral soil C stocks. Therefore, while tree species can influence C stocks in soils, our understanding of the processes involved remains elusive (Felipe-Lucia et al., 2018), probably because of important interactions with other factors such as soil properties and local climate (Versini et al., 2013; Augusto et al., 2015; Ribbons et al., 2018; Verstraeten et al., 2018). For example, enhanced soil C sequestration in mineral soil may not occur under broadleaf species planted on a poor site where conditions do not allow macrofaunal activity; likewise, enhanced soil C sequestration in forest floors may not occur under conifers on a rich site, where conditions allow for more rapid decomposition and mixing of litter into mineral soil (Ribbons et al., 2018).

9.1. Relevance and considerations

A trade-off between soil C storage and wood production should be considered (Bellassen and Luyssaert, 2014) because many broadleaf species grow slower than conifers in nutrient-poor or harsh environments (Chapin et al., 1993; Augusto et al., 2014). Broadleaf species are expected to be most beneficial in terms of sequestration of stable mineral soil C in forests under favourable conditions (fertile soil, mild climate), whereas conifer species are expected to achieve higher ecosystem C stocks under less favourable conditions.

In conclusion, tree species differ in the rate of accumulation, the distribution between forest floor and mineral soil, and the stabilization level of soil C Conifers and ECM-associated species store more C in forest floors, and broadleaved and AM-associated species might store more soil C in mineral horizons. There appears to be no simple correlation between the magnitude of soil C stocks and their stability. The selection of tree species to optimise soil C sequestration likely depends on the nature of the site in terms of abiotic as well as biotic properties.

9.2. Gaps in knowledge and research needs

Further research is needed to tease apart species and site influences. We need to know *where* and *why* certain tree species will be beneficial to sequestration of soil C, and in *which forms and soil layers*. This could be achieved by combining common-garden experiments in networks at greater spatial scales. While there is a large body of literature and data on tree species effects on aboveground litter and forest floor, belowground C fluxes associated with root turnover and biota in the mineral soil remain to be addressed in detail using well-designed experimental platforms.

10. Management of tree species diversity

Intensive forest management with focus on wood production has often favored the single most commercially important tree species through planting and selective thinning (Baeten et al., 2019). However, recent research has shown that such single-species forests provide a narrower range of ecosystem services compared with forests of higher tree species diversity (Gamfeldt et al., 2013; Ratcliffe et al., 2017). Silvicultural transition to mixed-species forestry has therefore been suggested as a means to provide a wider range of ecosystem services and adaptation to climate change (Pretzsch, 2014).

Establishing mixed stands instead of monocultures could result in higher soil C stocks as a consequence of several mechanisms, including: above- and below-ground niche complementarity; higher aboveground litter inputs to soils because of canopy packing and higher productivity of mixtures (Hulvey et al., 2013; Jucker et al., 2014; Pretzsch, 2014); and higher belowground litter inputs because of more efficient exploitation of the soil volume by roots in mixtures (Finér et al., 2017). Belowground overyielding, *i.e.* higher root biomass or production in the mixture than predicted from weighted averages of the monoculture stands, has also been reported in mixed-species stands in some (Laclau et al., 2013; Ma and Chen, 2017; Germon et al., 2018) but not all cases (Jacob et al., 2013). However, observed effects of tree species diversity on soil C appear more complex than expected based on aboveground niche-complementarity. In national forest inventory plots of temperate and boreal forests across Sweden, a consistent positive relationship between species diversity and soil C stock was found (Gamfeldt et al., 2013). Only a few studies have been able to separate the effect of species diversity from that of tree species identity. In such an exploratory design at the European level (five regions spanning boreal to Mediterranean climate), Dawud et al. (2017) found a small but additive effect of species diversity on soil C stocks (0–20 cm depth), *i.e.,* the effect was predictable from soil C stocks in the respective single-species stands. There was no effect of tree species diversity on aboveground litter production along the studied tree species diversity gradient (Ratcliffe et al., 2017), but a positive effect of species diversity on root biomass (as a proxy for root input) emerged in broadleaf mixtures (Finér et al., 2017).

More pronounced effects were observed in studies across finer spatial scales. In Bialowieza, Poland, Dawud et al. (2016) reported higher soil C stocks in deeper layers (20–40 cm) in species-diverse stands of up to five tree species. Moreover, this effect was non-additive, *i.e.* larger than expected based on corresponding monoculture stands, and was positively related to greater root biomass, possibly due to belowground niche differentiation in the most species-diverse stands (Finér et al., 2017).

Case studies at single sites have also indicated C storage in more stable forms in species-diverse broadleaved forests, e.g. European beech (*Fagus sylvatica*) forests admixed with other broadleaved species had lower forest-floor C stocks but higher mineral-soil C stocks and higher percent C per unit clay than the adjacent beech monocultures (Guckland et al., 2009; Schleuß et al., 2014). However, this effect could not be separated from the effect of "diluting" beech with other broadleaves, thereby emphasizing the need for dedicated experimental designs for testing the true effect of species diversity. In subtropical China, soil C stock in the 0–20 cm layer was 14% and 8% higher in mixed plantations than in single-species plantations of *Pinus massoniana* and *Castanopsis hystrix* plantations, respectively, and there was a lower net emission of greenhouse gases from the soil of mixed plantations compared to *C. hystrix* plantations (Wang et al., 2013).

10.1. Relevance and considerations

Species identity, *i.e.* species *per se*, or functional group such as conifers or N-fixers, potentially has more impact on soil C than tree species diversity (Dawud et al., 2016; Dawud et al., 2017). The effects on soil C of tree species mixing are smaller and less consistent than effects of tree species identity or functional group (conifers v. broadleaves). The results that have been published show that the effect of species diversity on soil C is at best weak-to-moderate (Wang et al., 2013; Dawud et al., 2016; Dawud et al., 2017), but may also be insignificant, particularly in large-scale inventories in which broadleaf, conifers and mixed forests are compared (Wiesmeier et al., 2013; Brunel et al., 2017). Results are also context-dependent, *i.e.* they differ according to climate, soil type, or species identity (Dawud et al., 2017; Ratcliffe et al., 2017).

Although above- and even belowground overyielding would be expected to support higher organic matter inputs to soils, output fluxes as represented by respiration rates or decomposition rates may also be affected. However, the evidence that mixtures or diverse tree species affect decomposition rates as well as the nature (non-additivity) and direction of such effects appear weak and context-dependent (Prescott et al., 2000b; Ball et al., 2014; Ratcliffe et al., 2017), and effects differ between forest floor and mineral soil (Ball et al., 2014). It is possible that these variable effects of tree species diversity on output fluxes of C compensate for any positive effects of above- and belowground overyielding on soil C stocks.

In conclusion, effects of species diversity on soil C stocks are smaller and less consistent than the effects of tree species identity or functional group (conifers v. broadleaves), and results are context-dependent. Mixed forest stands are reported to have greater resilience to disturbances including climate change and so may contribute to long-term preservation of soil C stocks (Silva Pedro et al., 2015). However, targeted selection of tree species with complementary traits for efficient resource use appears to be the preferred management approach for influencing soil C stocks in mixed forests, rather than increasing tree species diversity *per se*.

10.2. Gaps in knowledge and research needs

Further research should unravel how tree species diversity affects the processes and soil biota controlling input and output fluxes of C that in turn determine soil C stocks. Most studies of tree species diversity effects in mixed forests have been conducted at the stand level, and belowground niche complementarity effects as a driving mechanism for C sequestration remain to be documented at the tree level. The ultimate goal would be to identify the specific mixtures of tree species or functional groups of tree species that are most conducive to sequestration of soil C. More common-garden experiments comparing plots with different tree species diversity (e.g. Verheyen et al. (2016)) are needed.

11. Management of stand density and thinning

Forest stands planted with a high density of stems generally have larger basal area than low-density stands. High-density stands should therefore have higher C inputs to soil than low-density stands, which could increase their soil C stocks compared to low-density stands (Laganiere et al., 2010). These expected effects on soil C stocks in densely planted stands are similar to those expected in forest stands with lower thinning.

In a meta-analysis, Laganiere et al. (2010) showed that afforested plantations with high planting density (>1600 stems ha^{-1}; 53 observations) did not have greater soil C stocks (mean depth: 0–26 cm) compared to plantations with low planting density (<1600 stems ha^{-1}; 55 observations) over a 21-year period. Recent case-studies, however, show contrasting results regarding the stand density effect on soil C stocks. Recent case studies in China (*Fraxinus mandshurica* plantations, Sun et al. (2019); *Cunninghamia lanceolata* plantations, Farooq et al. (2019) and in Canada (*Populus* plantations, Truax et al. (2018)) showed increased soil C stocks (soil organic matter content for Farooq et al. (2019)) in high-density afforested stands compared to low-density afforested stands, 10 to 17 years after planting. Conversely, no clear effects of stand density on soil C stocks were detected 8 years after plantation establishment in a case-study in Uruguay (*Eucalyptus* and *Pinus* plantations; Hernández et al. (2016)). Another study in 103 *Quercus* stands in Spain suggested a positive tree density effect on soil C stocks (González et al., 2012). Conversely, lower soil C stocks in high-density stands (842 stems ha^{-1}) than in low-density stands (450 trees ha^{-1}), were observed in a mature (65- to 75-year-old) *Pinus densiflora* forest in South Korea (Noh et al., 2013). Finally, no stand-density effect on soil C stocks were observed in mature Douglas-fir (*Pseudotsuga menziesii*) plantations in France (Cécillon et al., 2017).

Thinning of forests, in which a portion of the stems are removed, would be expected to reduce soil C stocks, due to reduced litter input and/or increased rates of decomposition because of higher temperatures and moisture (Vesterdal et al., 1995). However, most studies of effects of stand thinning on soil C stocks have reported no significant effects on soil C stocks of mineral soil (Skovsgaard et al., 2006; Jandl et al., 2007; Hoover, 2011; Powers et al., 2011; Jurgensen et al., 2012; Cheng et al., 2013; Ruiz-Peinado et al., 2013; Zhou et al., 2013; Achat et al., 2015b; Noormets et al., 2015; Strukelj et al., 2015; Kim et al., 2016), though some have documented soil C losses (Mattson and Smith, 1993; Strong, 1997; Chiti et al., 2015; Moreno-Fernández et al., 2015; Mushinski et al., 2019), even in deeper soil horizons (down to 1 m depth) (Gross et al., 2018). A recent meta-analysis including 53 studies did not find a remarkable thinning effect on soil C stocks, although soil CO_2 efflux increased by almost 30% (Zhang et al., 2018b). Similarly, an earlier meta-analysis (Zhou et al. (2013) based on 28 observations (11 studies) found no significant effects of partial cutting (compared to uncut controls) on soil C stocks.

Organic C stocks of the forest floor can be reduced if thinning is intense, *i.e.* up to 50% reduction of basal area compared to unthinned control (Vesterdal et al., 1995; Novak and Slodicak, 2004; Powers et al., 2012; Achat et al., 2015b; Bravo-Oviedo et al., 2015). In a meta-analysis, light thinning (≤33% removal of volume, stand basal area or stems) increased soil C by 17% whereas heavy thinning (≥65% removal) decreased soil C by 8%; moderate thinning (33–65% removal) did not alter soil C stocks (Zhang et al., 2018b). The same meta-analysis showed that soil C increased in early stages (≤2 years) after thinning (+30%) but was similar to control stands in medium (2–5 years) to late stages (>5 years) after thinning. This suggests an increased soil C loss from decomposition in the first years after thinning when the canopy is open and soil temperatures are increased (Vesterdal et al., 1995; Zhang et al., 2018b). Thinning may also result in large reductions in coarse woody debris (Powers et al., 2011; Zhou et al., 2013; Achat et al., 2015b).

11.1. Relevance and considerations

Effects of stand density and thinning on soil C stocks are not consistent among published studies and are often not significant. In secondary forests, the increased risk of disturbance in unthinned stands (and related C-losses) may, moreover, outweigh any positive effect of a high stand density.

11.2. Gaps in knowledge and research needs

Long-term field experiments to study soil C stocks under different intensities of stand thinning are needed (Zhang et al., 2018b). Such experiments would be necessary to relate soil C stocks to thinning intensities and to determine thresholds for stem numbers to be removed. Moreover, regions such as South America or Africa are under-represented in the current literature.

12. Herbivory regulation

Ungulate herbivores are important regulators of plant-soil feedbacks (Bardgett and Wardle, 2003; Tanentzap and Coomes, 2012; Andriuzzi and Wall, 2017) and reduction of herbivory pressure has been proposed to increase terrestrial C stocks at local and regional scales (Tanentzap and Coomes, 2012). In relation to body size, feeding strategy (e.g. grazing or browsing), and population density, herbivores can modify plant community properties and functioning with consequences for the quantity and quality of organic matter inputs to soil (Wardle et al., 2002; Ayres et al., 2004; Wardle and Bardgett, 2004; Carline and Bardgett, 2005; Semmartin et al., 2010; Metcalfe et al., 2014; Wang et al., 2018; Ramirez et al., 2019; Valdés-Correcher et al., 2019). Meta-analyses revealed that ungulate herbivores had a strong negative effect on abundance, density, richness, structure and growth of tree regeneration (Ramirez et al., 2018) and significantly reduced aboveground biomass C and litter C in tropical, temperate, and boreal forests (Tanentzap and Coomes, 2012). Herbivores feed preferably on fast-growing, pioneer tree species (e.g., *Sorbus* sp.) than on slow-growing tree species (e.g., *Picea abies*) (Ramirez et al., 2012; Pröll et al., 2014), which can lead to changes in litter decomposability (Wardle et al., 2002). Moreover, herbivores can affect decomposition processes and soil properties by depositing urine and dung and by trampling and digging (Mohr et al., 2005; Gass and Binkley, 2011; Tanentzap and Coomes, 2012; Andriuzzi and Wall, 2017; Valdés-Correcher et al., 2019). Herbivore-induced changes in plant community structure and composition can indirectly enhance soil CO_2 fluxes and decomposition processes by altering soil microclimatic conditions (e.g., higher soil temperatures due to loss of crown shading) (Stark et al., 2000; Mayer et al., 2017a; Mayer et al., 2019).

While herbivory effects on soil C storage and the underlying mechanisms are well-documented for grasslands and shrublands, only a few studies have investigated herbivory effects on soil C storage in forests (Milchunas and Lauenroth, 1993; Tanentzap and Coomes, 2012; McSherry and Ritchie, 2013; Andriuzzi and Wall, 2017). The majority of the studies demonstrated a significant soil C increase with ungulate exclusion in tropical, temperate and boreal forests, but underlying mechanisms were mainly speculative. In a Brazilian tropical dry forest, for example, topsoil C stocks were 107% greater in non-grazed and lightly grazed plots compared to plots with high grazing intensity (Schulz et al., 2016). The authors related these findings to higher litter input rates and lower soil C losses when herbivory was low. Similarly, exclusion of elk significantly increased soil C in regenerating willow (*Salix* spp.) and aspen (*Populus tremuloides*) stands in the Rocky Mountains and in Arizona, respectively (Stritar et al., 2010; Gass and Binkley, 2011). Gass and Binkley (2011) proposed that changes in soil bulk density and moisture conditions as well as lower decomposition rates were responsible for the higher soil C content. Stritar et al. (2010) suggested that faster C accumulation led to the increase in soil C. Likewise, Prietzel and Ammer (2008) found a positive effect of ungulate exclusion on soil C stocks in temperate forests of the German Alps, and attributed this to higher litter input rates and reduced soil erosion from avalanches. In Scottish broadleaf forests, dissolved organic C was 36% higher when red deer were excluded; an outcome which was explained by higher rhizosphere deposits of soluble C compounds to soil (Harrison and Bardgett, 2004). In boreal *Alnus* and *Salix* stands of the Alaskan taiga, moose exclusion increased soil C by 54% (Kielland and Bryant,

1998). Higher fine-root production and lower soil respiration rates were thought to cause the higher soil C content. In a study across New Zealand, covering subtropical to temperate forests, Wardle et al. (2001) reported both positive and neutral responses of soil C stocks to herbivory exclusion. Inconsistent effects of herbivory on soil C were speculated to be related to differences in how browsers affected plant community composition. However, other studies did not find increased soil C pools following herbivore removal (Stark et al., 2000; Kooijman and Smit, 2001; Binkley et al., 2003; Köster et al., 2013; Relva et al., 2014) and lower soil C concentrations were found when herbivores were excluded in a German *Quercus* forest (Mohr et al., 2005).

12.1. Relevance and considerations

Across North America and Europe, population densities of wild ungulates have increased during recent decades (Rooney, 2001; Côté et al., 2004; Milner et al., 2006; Reimoser and Reimoser, 2010). In temperate and boreal forests with a high herbivory pressure, a reduction of wild ungulates can therefore be seen as a strategy to foster soil C stocks. However, in tropical forests (particularly in the Neotropics) herbivory by large mammals is unlikely to affect soil C stocks, since many wild animal species are either threatened, restricted in range, or frugivorous (Tanentzap and Coomes, 2012). To reduce soil C losses from domestic ungulate herbivory in tropical forests, Schulz et al. (2016) recommended grazing management that considers compulsory rotation systems. The establishment of denser tree regeneration under reduced grazing and browsing allows also for better protection of soil from erosion, landslides, avalanches and rock fall. As shown for a shrub-grassland ecosystem (Davies et al., 2016), herbivory can also reduce forest fire intensities by decreasing fuel loads. Nonetheless, a reduction in grazing animals can lead to reduced income from hunting or from meat/dairy production.

12.2. Gaps in knowledge and research needs

The depicted discrepancies in study results highlight the need for additional experiments on the effect of herbivory on soil C stocks in forest ecosystems (particularly in the tropics), but also for a better mechanistic understanding of how ungulate herbivores modulate plant-soil interactions and processes relevant for soil C storage. For example, whether and how herbivory-related shifts in plant community composition affect decomposition processes have to be untangled (e.g., due to changes in microclimate or soil microbial community), C input rates to soil (e.g., contribution of above- and belowground litter), and C stabilization processes in mineral soil horizons (e.g., aggregate formation). Studies incorporating other aspects such as physical soil disturbance from trampling are also needed. Moreover, experiments along gradients with different herbivory pressure levels are recommended to identify critical herbivory loads and ecologically sustainable population densities of ungulate herbivores.

13. Removal of litter and biomass for fodder, fuel or animal bedding

In many regions of the world, rural communities collect fuelwood, lop or pollard trees for fodder, and collect forest litter to be used as bedding for their livestock and, enriched with faeces and urine, used as compost for arable land. The continuous extraction of C and nutrients by these practices can have detrimental effects on forest soils, as demonstrated by studies of historical litter-raking practices in Europe.

Forest litter raking was commonly practiced in northwestern Europe (as part of the 'plaggen management', probably since the Bronze Age (Blume and Leinweber, 2004; Schulp and Verburg, 2009), and in central Europe with a peak between the 17th and 19th century (Ebermayer, 1876; Glatzel, 1990, 1991; Burgi and Gimmi, 2007; Gimmi et al., 2013). The litter was an important nutrient source for agriculture and the amount of litter extracted from the forest was even listed in official statistics (Katzensteiner and Englisch, 2007). Ebermayer (1876) described the negative consequences of litter raking on forest soils, particularly in mountain areas, including changes in humus content, altered water infiltration and storage, increased erosion, decreased fertility, and shifts in plant species composition. Comparing soil organic matter contents of a litter-raked stand to an adjacent protected stand, he found 36% less soil organic matter and 42% less N (forest floor + 47 cm mineral soil). Litter raking experiments by Hofmeister et al. (2008) showed that base-cation removal by litter raking in Norway spruce stands exceeded annual inputs from weathering and atmospheric deposition. Direct negative effects on tree nutrition and biogeochemical nutrient and C cycling were evident. Negative impacts of litter raking on productivity (Fiedler et al., 1962; Zang and Rothe, 2013) may reduce aboveground litterfall in the long run, thereby indirectly affecting soil C input. In harvest residue and litter removal experiments in a tropical Eucalyptus plantation Laclau et al. (2010) found that tree growth was much higher when organic residues from the previous rotation were not removed. There was also clear evidence that nutrient supply in this sandy tropical soil was largely dependent on the nutrients released by the decomposition of organic residues (Versini et al., 2013; Versini et al., 2014). Glatzel (1991) detected reduced base saturation and N contents of formerly litter-raked forest soils several decades after litter raking and lopping had ceased (based on data of the Tyrolean Soil Survey 1988). Using the same data source, a legacy of litter raking on soil C concentrations is evident while forest grazing had no significant effect (Simon, pers. comm.). Gimmi et al. (2013) modelled a 17% reduction of soil C pools due to litter raking in Swiss forests and legacy effects even 130 years after abandonment of this practice (2% average reduction). Indirect effects of altered N input on soil C sequestration are likely (see section 7).

Litter raking, lopping of forest trees, forest grazing and collection of dung are still common practices of subsistence agriculture in the Himalayas (Giri and Katzensteiner, 2013; Baral and Katzensteiner, 2015). Baral and Katzensteiner (2015) found 23% less soil C in an intensively utilized community forest area (in which 80% of the aboveground litterfall is harvested annually) compared to an adjacent protected forest area. In the Sahel, population growth and associated disturbances such as cutting trees for fuelwood and charcoal production, together with cultivation and overgrazing, have considerably reduced the cover and density of trees, and have significantly contributed to the depletion of soil C stocks (Tieszen et al., 2004; UNEP, 2012; Doso Jnr, 2014). In Senegal, constant loss of woody biomass has been documented (Woomer et al., 2004), and attributed to overexploitation of trees for fuel (Gonzalez, 2001). In Ethiopia, Gebeyehu et al. (2019) studied the effect of disturbance severity on C stocks by assessing the harvesting and canopy openness due to removal of trees with stem diameter ≥ 5 cm. The disturbance level (number of stems removed from the forest) resulted in a decrease in aboveground C stocks of 36% in the highly disturbed compared with least-disturbed forest. A negative correlation between the canopy openness and soil C stocks indicated that increasing canopy openness was associated with decreasing soil C stocks.

Regulating forest use may reduce biomass extraction and allow vegetation biomass and soil C to accumulate. Exclosures can be effective in enhancing the composition, diversity and density of vegetation, restoring degraded soils and increasing soil C (Yayneshet et al., 2009; Mekuria et al., 2011; Birhane et al., 2017). However, exclosures can be socially unacceptable in areas where smallholder farmers depend on these materials for their livelihoods and may increase pressure on other areas. Community-based forest management, in which local people manage the forest for multiple purposes including forest and soil restoration, may be the best option for restoration of soil C levels. When communities gain responsibility for managing resources sustainably, the vicious cycle of forest degradation can be interrupted (MFSC, 2013). Community-based forest management has been practiced in Nepal since

the 1970s, and large areas have been handed over to community forest user groups for sustainable management (MFSC, 2013; Baral et al., 2018). Besides increasing forest cover and growing stock, community forestry has contributed to income generation (including non-timber forest products) and has played a significant role in improving livelihood of rural people (Zewdie, 2008; Baral et al., 2019).

Plantations of fast-growing trees (e.g., *Eucalyptus* or bamboo) for fuelwood production may be effective in increasing soil C stocks. Zewdie (2008) investigated soil C pools (0–30 cm depth) along a chronosequence of coppiced *Eucalyptus* plantations established on former agricultural fields in the Ethiopian highlands. He found a decrease in soil C and nutrient stocks with the number of cutting cycles and related the degradation to combined effects of whole-tree harvesting and litter raking (the latter also used as a fuel). Litter raking is probably the main cause of soil C depletion as no significant coppice effects on soil C stocks have been found in studies comparing coppice forests to high forests (Bruckman et al., 2011; Bruckman et al., 2016) or chronosequence of coppices (Sferlazza et al. (2018). Plantations of fast-growing, frequently exotic species may not be appreciated by the community. For example, in Nepal, communities were replacing planted exotic pines with native broadleaved species which had multiple uses (Baral and Katzensteiner, 2015), and, in the long run may have positive impacts on soil C stability.

Multipurpose agroforestry tree species that produce fodder and fuelwood may also be effective in restoring stocks of soil C. Trees with N-fixing root associates may be particularly effective in this regard. Along an afforestation chronosequence of *Acacia senegal* in Sudan, soil C stocks (0–50 cm) increased with plantation age (Abaker et al., 2016). The increase in soil C stocks was attributed to both the trees and the greater ground vegetation biomass beneath the trees.

13.1. Relevance and considerations

Biomass other than timber may still be important in countries where forests are still a major source of fuelwood and where subsistence agriculture still relies on forest resources (e.g., for fodder). Litter-raking seems to have a detrimental long-lasting effect on soil C pools. On the other hand, litter which is transformed into compost and is applied to arable lands increases soil C stocks there. Shrestha and Singh (2008) found higher soil C stocks in arable land than in litter raked forests in Nepal. Therefore, recommendations regarding C stocks need to be based on a holistic view of the land use system, and C accounting at the landscape level. Additionally, litter raking may reduce fuel loads in fire-prone forest ecosystems such as pine plantations.

Establishment of exclosures or protected forests can enhance the pressure on the remaining agricultural and grazing land and on natural forest remnants (e.g., church forests in Ethiopia), accelerating erosion and C losses in these areas. Likewise, plantations of *Eucalyptus* or other fast-growing trees on fertile soils comes at the cost of food production and may provide little fodder.

13.2. Gaps in knowledge and research needs

The potential for community-managed stands of multipurpose agroforestry trees to provide fodder and fuel while simultaneously improving soil C stocks merits investigation. Identification of tree species appropriate to the area and the needs of the local community, and the optimal management regime (planting, assisted natural regeneration, coppicing) would support sustainable forest fodder and fuelwood production. Long-term monitoring of soil C stocks and other indicators of soil quality in these forests would further indicate their potential for slowing or reversing land degradation. Nitrogen-fixing tree species warrant particular attention.

14. Fire management

Many forest ecosystems globally are affected by wildfire; annually, the area burned globally is about 3.5 million km^2, mostly in savannas. The area burned by forest fires is greatest in equatorial Asia (62%), boreal North America (48%) and boreal Asia (36%) (Giglio et al., 2013). Carbon emissions from wildfires are greatest in the Tropics (about 84% 1830 Tg C yr^{-1}; (Van Der Werf et al., 2017). Rapid revegetation after fire sequesters approximately the same amount of C over a period of several years to decades (Landry and Matthews, 2016). Losses of C to the atmosphere from deforestation fires and burning of drained peatlands, however, are not balanced by vegetation regrowth and thus are a net CO_2 source (Van Der Werf et al., 2017).

Fire intensity and duration (Wooster et al., 2005; Keeley, 2009) determine the amount of C combusted and the impact on soil C (Simard et al., 2001; Czimczik et al., 2003; Neary et al., 2005). In turn, intensity is a function of the amount and characteristics of fuel and weather conditions (Luo et al., 2017). Hot fires that occur under dry and warm conditions in flammable fuels release more C than fires that occur under cool, moist conditions (Wiedinmyer and Hurteau, 2010; Bradstock et al., 2012; Spessa et al., 2013). Fire severity depends upon the amount and characteristics of the fuels combusted during a fire (Wells et al., 1979). Effects on soil depend also upon the speed of the fire front (*i.e.*, the duration of soil heating) as well as soil moisture. High-severity crown fires can sweep so rapidly over a landscape that not much of the heat is transferred downward to the soil surface (Bentrup et al., 2012). Conversely, low-intensity smoldering fires in roots, duff, or peat layers can cause extensive soil heating and large changes in mineral soil (Rein et al., 2008).

Impacts of fire on soil C are variable. Nave et al. (2011) examined a combined total of 468 soil C responses from 57 publications comparing wildfire to prescribed fire in temperate forests. They found that fire significantly reduced soil C by 26%, primarily in the forest floor (forest-floor C stock was reduced by an average of 59%). Recovery of the C in burned forest floors required an average of 128 years. Reductions in forest-floor C storage from prescribed fires were smaller (-46%) than from wildfires (-67%). Carbon storage in mineral soils did not change. Mineral soil C concentrations did not change following prescribed burns but were significantly reduced in response to wildfires. The unchanged mineral soil C stock after wildfire was attributed to a possible compensating effect of increased soil bulk density.

A *meta*-analysis of fire (wildfire, prescribed fire and broadcast burning) effects on soils in North America, (Johnson and Curtis, 2001) detected significant differences in soil C 10 years after the fire event. Soil C content was higher following wildfire than prescribed fire, which they attributed to greater accumulations of charcoal and recalcitrant hydrophobic organic matter and to greater occurrence of N-fixing vegetation after wildfire. Several other studies have not reported the expected positive relationship between fire severity and soil C losses (Campbell et al., 2007; Johnson et al., 2007; Boerner et al., 2009; Meigs et al., 2009).

Boreal forests store up to 20% of global soil C (Tarnocai et al., 2009), much of which is in peatlands that cover approximately 4 million km^2 and store an estimated 500–600 Gt of C (Turetsky et al., 2015). Surface drainage of boreal peats for forestry stimulates tree growth and enhances total vegetation C uptake (Päivänen and Hånell, 2012), but the resulting drying of peat makes it susceptible to fire. Peat fires are dominated by smoldering combustion which moves slowly through surface and subsurface soil layers, often persisting for days or months (Rein et al., 2008). Drier soils and increased lightning ignitions as a result of the predicted warming climate at northern high latitudes increase the likelihood of peat fires. Tropical peatlands, primarily in Southeast Asia, store an additional ~100 Gt C across 400,000 km^2 (Turetsky et al., 2015). Drainage and logging in tropical peatlands have shortened fire frequencies, and repeated burning has further reduced soil C stocks (Langner and Siegert, 2009; Hoscilo et al., 2011). Drainage

and increased frequency of human-caused ignitions in peatlands near densely populated urban areas has converted many peatlands from fire-resistant to fire-prone systems (Turetsky et al., 2015).

In addition to consuming 50% or more of the organic matter in surface soil layers, forest fires rearrange C into new forms and distribution within lower soil layers (Foereid et al., 2011). Some of the litter turns into particulate, fine-earth sized (< 2 mm) particles causing a net increase in the soil C content. Fires also transform C compounds into new forms that can be resistant to microbial decomposition such as black carbon (González-Pérez et al., 2004; Czimczik and Masiello, 2007; Lehmann et al., 2008). Much effort has been devoted to characterizing black-carbon chemistry and its recalcitrance and persistence in the environment (Bird et al., 2015) but recent evidence suggests that climate, soil type, biota, and land use influence whether black carbon accumulates or is lost from soil (Czimczik and Masiello, 2007; Gibson et al., 2018).

Fires negatively affect soil microbial populations in boreal forests and temperate forests. A meta-analysis of 42 published microbial responses to fire (Dooley and Treseder, 2012) found an average decline in total microbial biomass of 33.2% following fires. Fungi were more sensitive to fire than bacteria; soil fungal abundance declined by an average of 47.6% and bacterial biomass declined by 33.3% following fire (Dooley and Treseder, 2012; Holden and Treseder, 2013). Mycorrhizae in particular may be affected by the reduction in vegetation after fire; declines have been reported in both vesicular–arbuscular mycorrhizal and ectomycorrhizal fungi (Allsopp and Stock, 1994; Rashid et al., 1997; Dahlberg et al., 2001; Treseder et al., 2004). Decomposition processes are slowed as well in recently burned boreal forest stands but recover after 10–15 years (Holden and Treseder, 2013).

14.1. Relevance and considerations

Wildfire is of increasing concern due to changes in land use and occupancy, fragmentation of forests, and climate change effects on fuels (Flannigan et al., 2016), fire weather (Liu et al., 2010), and possibly increased lightning ignitions (Romps et al., 2014; Veraverbeke et al., 2017). A 50% increase in fire occurrence is projected in boreal forests by the end of the century (Flannigan et al., 2009), and fire potential will likely increase significantly in other geographic areas (Cochrane and Laurance, 2008; Lindner et al., 2008; Liu et al., 2013; Dwomoh and Wimberly, 2017; Le Page et al., 2017; Schoennagel et al., 2017; Seidl et al., 2017; Taufik et al., 2017). Of great concern is the increasing frequency of extreme wildfire events – the so-called megafires (Stephens et al., 2014; Barbero et al., 2015; Tedim et al., 2018). The potential for fire frequency to increase beyond natural levels and reduce the time for recovery may drive soil C levels lower and ultimately adversely affect vegetation productivity (Pellegrini et al., 2018).

Fire suppression can delay but cannot prevent wildfires over the long term. It leads to an apparent net C accumulation that increases the risk of large C release during catastrophic fires (Jandl et al., 2007). Adaptations to wildfire center on accommodating forest fire in fire-adapted ecosystems primarily by managing fuel loads through prescribed burning and silvicultural practices. Where fire suppression has resulted in hazardous levels of fuels, re-introducing fire may require first altering structure by mechanical means followed by a series of carefully planned controlled burns (Boerner et al., 2008; Schwilk et al., 2009; Phillips et al., 2012) that may include increased harvest to reduce old and susceptible stands (Schelhaas et al., 2010). These treatments, particularly prescribed fire, result in soil C losses that take decades to recover (Nave et al., 2011; James and Harrison, 2016), but may be favorable when compared to wildfire soil C losses (James et al., 2018). Other options include conversions to less flammable species, such as from conifers to broadleaves (Schelhaas et al., 2010). Fire breaks of less flammable species, bare ground, or even agricultural crops can prevent fire spreading and protect infrastructure (Lloret et al., 2002; Syphard et al., 2014; Khabarov et al., 2016). In all cases, mitigating wildfire impacts on forest soil C will require attention to the ecological context and will involve trade-offs among C sequestration and other values.

14.2. Gaps in knowledge and research needs

Fire behavior, particularly flaming and smoldering combustion that drives heat transfer into soil, is a critical knowledge gap underlying other deficiencies in our understanding of physical and chemical transformations of soil organic matter (Dickinson and Ryan, 2010). Needed are measurements of fundamental processes that can be incorporated into fire behavior models (Massman et al., 2010). Additional interdisciplinary research is needed relating soil heating temperatures to soil biotic changes to better understand the biophysical processes initiated by fire (Dickinson and Ryan, 2010; Pingree and Kobziar, 2019). Significant development would be a methodology or metric that indicates the cumulative and additive effects of soil heating over time (Wiesmeier et al., 2019). Physics-based fire models are under development that better predict the behavior of extreme wildfires (Werth et al., 2016; Coen, 2018; Hoffman et al., 2018) and other work, such as the Fire Modeling Intercomparison project, seeks to reduce uncertainties in future projections by evaluating the coupling of fire and climate models (Rabin et al., 2017).

Changes in fire regime and emergence of novel ecosystems as a result of global change (Williams and Jackson, 2007; Perring et al., 2013; Radeloff et al., 2015) challenge our evidence base for sustainable management of soil organic matter and the role of fire in global C cycles (Flannigan et al., 2009; Flannigan et al., 2016). In particular, the effects on soil C in fire-sensitive systems of shorter return intervals and more intense fires (e.g., Cochrane and Laurance (2008)) requires greater research effort in understudied regions, for example central Asia and the Tropics (IUFRO, 2018). This is playing out today in forested permafrost regions where wildfires burn the insulating layer and decrease surface albedo causing the permafrost to thaw. Shorter return intervals between fires and rotation lengths are insufficient for the permafrost layer to recover, exposing organic deposits to accelerated decomposition (Aaltonen et al., 2019).

15. Summary and considerations

Current scientific knowledge on how forest management practices affect soil C stocks in forest ecosystems is summarized below and in Table 1.

The effect of *afforestation* on soil C stocks is largely related to land-use history. On former croplands, soil C stocks generally increase following afforestation, while on former grass- and peatlands, soil C stocks remain unchanged or even decrease following afforestation. The rate of soil C sequestration is also affected by the tree species selected and by soil properties. Studies on long-term sequestration, C stability, and deep-soil C storage following afforestation are needed.

The *conversion of primary forests to secondary forests* cause a general decrease in soil C stocks, particularly if it is first converted to an agricultural land-use prior to reforestation. However, natural disturbances in boreal forests can have stronger negative effects on soil C stocks than forest harvesting. Retention of primary forests for the purposes of soil C storage can, therefore, only be evaluated within the context of regional natural disturbance regimes. Global estimation of forest conversion effects on soil C stocks is made difficult by inconsistent definitions of 'primary forest'. Information is needed on long-term soil C sequestration and on upper ecological set points (*i.e.* 'C saturation').

Harvesting, particularly clear-cut harvesting, generally results in a decrease in soil C stocks, with highest C losses occurring in the forest floor and the upper mineral soil. Studies on deep soil C storage are rare. Although soil types strongly influence the response of soil C to harvesting, many soil types are not covered by available studies. There is a need for long-term research sites across a range of soil- and forest ecosystem types. Studies that address the mechanisms underlying soil C

Table 1
Thirteen forest management practices and how they affect forest soil organic carbon stocks. For each practice, existing gaps in knowledge and suggested research to address the gaps are given.

Management practice	Effect on soil C	Gaps in knowledge	Research needs
Afforestation	Positive, but mainly if the former land use was cropland	Effects on deep soil C stocks and soil C stability, understanding of main driving fluxes and processes	Long-term repeated studies of chronosequences targeting mineral as well as organic soils
Conversion of primary forest to secondary forest and plantation	Negative, especially if transitioning through an agricultural land use	Clear definition of primary forest for benchmarking is often lacking; Limited data on long-term impact.	Long-term research sites
Harvesting	Negative	Many soil types not covered by available studies; Limited data on harvesting effects on deep soil C	Long-term research sites across a range of soil and forest ecosystem types
Removal of harvest residues	Negative	Many soil types/practices not covered by available studies; Limited data on long term impact and duration of effects.	Long-term research sites across a range of soil and forest ecosystem types
Soil disturbance from site preparation	Negative	Trade-off between intended effect (better regeneration) and unintended effect (increased decomposition rate of soil organic matter); unknown duration of soil disturbance effect	Quantification of soil C loss due to soil disturbance; mechanistic understanding of soil disturbance effect on soil organic matter.
Nitrogen addition	Positive	Mechanisms of N incorporation into stabilized soil organic matter	Linkages between the changes in the composition and abundance of mycorrhizal fungi as well as interaction with additional nutrient (P, K) additions
Selection of species with nitrogen-fixing associates	Positive	Relative contribution of enhanced tree growth, increase in C allocation belowground and reduced loss of old soil C; risks of positive effects on soil C to be offset by an increase in N_2O emissions.	Comprehensive long-term field studies dealing with both C sequestration and N_2O emissions
Tree species selection	Coniferous species store more C in the forest floor; broadleaved species may store more (and more stabilized) soil C in soil mineral soil	Understanding of the interactions with site conditions (soil properties, climate)	Large-scale studies of soil C pool size and soil C stability as well as driving processes in common garden experiments
Management of tree species diversity	Positive or neutral	Interactive roles of species diversity and functional diversity	Long-term and large-scale monitoring of common garden experiments with different levels of species diversity and functional diversity
Management of stand density and thinning	Neutral	Limited information on long-term effects and thinning intensities on soil C stocks	Long-term experiments with different stand density and/or thinning intensities
Herbivory regulation	Positive	Limited data for tropical forests; lack of understanding of herbivore effects on plant-soil interactions (including physical disturbance)	Experiments along herbivory gradients to depict ecologically sustainable population densities
Removal of litter and biomass for fodder, fuel or animal bedding	Negative	Interaction effects between agriculture, agroforestry and forestry. Limited information on belowground root production/soil C effects of lopping	Replicated experiments on sustainable forest fodder and fuelwood production
Fire management	Negative or positive in cases of fire suppression and prescribed burning	Soil heating and changes in biophysical processes initiated by fire; understudied regions, for example central Asia and the Tropics	Effects of shorter return intervals and more intense fires on soil C in fire-sensitive systems

losses after harvest are needed.

The *removal of harvest residues* has an overall negative effect on forest soil C stocks. Soil C losses are largest after whole tree and stump harvesting operations. On nutrient-poor sites, this might have severe consequences for fertility, productivity and long-term C sequestration. The harvest of residues has a greater impact on soil C in temperate than in boreal forests. Studies in tropical forests and studies following soil C stocks after multiple rotations of residue harvesting are needed. Future studies should also consider the implications of residue removal on deep soil C stocks.

Soil disturbance from site preparation decreases soil C stocks, particularly in the organic topsoil; however, improved growth of tree seedlings may outweigh soil C losses over a rotation. The incorporation of organic material into deeper soil horizons may increase its stabilization.

Studies distinguishing between disturbance effects from different management techniques (e.g. ground preparation, drainage or displacement of the organic layer) on soil C are needed. Long-term effects of soil disturbance on soil C stocks in peatland forests requires study.

Nitrogen addition has an overall positive effect on soil C stocks across a wide range of forest ecosystems. The benefits of N fertilization must be weighed against the environmental costs of fossil-fuel combustion and CO_2 emissions associated with fertilizer production, distribution and application. The forms in which N is found in soil organic matter of various stability and the mechanisms through which N addition generates greater soil C stocks require clarification.

Soil organic C stocks under *species with nitrogen-fixing associates* are higher than under other tree species. On degraded soils, N-fixing species increase soil C stocks much faster than other species. The mechanisms accounting for the general trend of C accretion in soils under N-fixing trees are not fully understood and long-term field studies are needed in contrasting environments to disentangle the influences of enhanced tree growth, increase in C allocation belowground, and interference with degradation of organic matter.

Tree species selection influences soil C stocks, with coniferous species accumulating more C in the forest floor and broadleaved species tending to store more C in the mineral soil. Certain broadleaved species are associated with faster litter decomposition and a more abundant soil macrofauna, but the implications for stabilization of C remains to be elucidated. Broadleaf species are expected to sequester more soil C under fertile and warm site conditions, while coniferous species are expected to store more C under less fertile and cooler conditions. Tree species effects are highly context-dependent, and soil C sequestration, C stability and the interaction of species with site conditions should be studied in networks of common-garden experiments over a broad spatial range.

There is some evidence that increased *tree species diversity* could positively affect soil C stocks in temperate and subtropical forests, but

in many cases no clear species diversity effect on soil C is observed. Tree species identity, particularly N-fixing species, seems to have a stronger impact on soil C stocks than tree species diversity. Mixed forest stands have greater resilience to natural disturbances and climatic changes, which would preserve soil C stocks. Untangling the interactive roles of species diversity and functional diversity and identifying tree species mixtures that are most effective in sequestering soil C are needed. Tree-diversity common-garden networks provide an experimental framework to test such questions.

Management of stand density and thinning have small effects on forest soil C stocks although soil CO_2 fluxes are significantly increased. Long-term experiments with different thinning intensities are needed, particularly in South America and Africa.

Soil C stocks tend to be higher under the exclusion of ungulate herbivores and *herbivory regulation* is considered a pro-active management practice that positively affects soil C stocks in forest ecosystems. However, limited information is available for tropical forests and there is a general lack in understanding of how herbivores affect plant-soil interactions. Experiments along herbivory gradients are recommended in order to predict critical herbivory loads and ecologically sustainable population densities.

Removal of litter and biomass for fodder, fuel and animal bedding is related to a reduction in the soil C stocks. However, negative effects can be offset if litter used for animal bedding is later used as an organic fertilizer on arable land. A holistic view at a landscape level is required when assessing soil C in areas where communities rely on biomass removal from forests. Studies of sustainable forest fodder and fuelwood production that are based on replicated experiments are needed. Investigations of the potential for multipurpose agroforestry trees, especially N-fixing species, to increase soil C stocks and improve soil while providing for the needs of local community are recommended.

Wildfires can have strong negative effects on forests soil C stocks, with largest reductions occurring in the forest floor. *Fire management* practices, such as prescribed burning, can also reduce soil C stocks, but not as much as wildfires do. Practices to prevent wildfires in forest ecosystems include harvesting susceptible stands, converting to less-flammable species (e.g., from coniferous to broadleaved species), or creating fire-breaks between stands. Drainage of peatlands can convert them from fire-resistant to fire-prone ecosystems. Global change is altering fire regimes, with shorter return intervals and more intense fires affecting soil C in fire-sensitive systems. Additionally, the emergence of novel ecosystems requires greater research effort in understudied regions, for example central Asia and the Tropics.

As the largest pool of organic C in most forest ecosystems, changes in the size and dynamics of the soil C pool can influence total ecosystem C balance. In a more holistic perspective, the full accounting of the influence of management practices on the mitigation of greenhouse gas emissions requires, on the one hand, consideration of the synergies and trade-offs between forest and ecosystem C storage, including the important soil C reservoir and on the other, consideration of the substitution and storage effects of timber, fibre or energy production from the forest. Additionally, implications of changes in the size and dynamics of the soil C pool for nutrient cycling should be considered. Particularly if soil C stocks increase due to forest management activities, C:nutrient ratios of soil organic matter must be maintained in order to ensure a sustained stand nutrition.

Acknowledgements

Part of the work of L. Augusto and L. Cécillon was carried out in the framework of the French “4 per 1000 Study” (INRAE; jointly funded by the French agency for environment and energy management (ADEME) and the French Ministry of agriculture and food; grant number 1660C0020). Both thank L. Saint-André for his help, and S. Pellerin and L. Bamière for their scientific coordination work.

Appendix A. Supplementary data

Supplementary data to this article can be found online at https://doi.org/10.1016/j.foreco.2020.118127.

References

Aaltonen, H., Köster, K., Köster, E., Berninger, F., Zhou, X., Karhu, K., Biasi, C., Bruckman, V., Palviainen, M., Pumpanen, J., 2019. Forest fires in Canadian permafrost region: the combined effects of fire and permafrost dynamics on soil organic matter quality. Biogeochemistry 143, 257–274.
Abaker, W., Berninger, F., Saiz, G., Braojos, V., Starr, M., 2016. Contribution of Acacia senegal to biomass and soil carbon in plantations of varying age in Sudan. For. Ecol. Manage. 368, 71–80.
Achat, D.L., Deleuze, C., Landmann, G., Pousse, N., Ranger, J., Augusto, L., 2015a. Quantifying consequences of removing harvesting residues on forest soils and tree growth – A meta-analysis. For. Ecol. Manage. 348, 124–141.
Achat, D.L., Fortin, M., Landmann, G., Ringeval, B., Augusto, L., 2015b. Forest soil carbon is threatened by intensive biomass harvesting. Sci. Rep. 5, 15991.
Aguiar Jr, A., Barbosa, R.I., Barbosa, J.B., Mourão Jr, M., 2014. Invasion of Acacia mangium in Amazonian savannas following planting for forestry. Plant Ecolog. Divers. 7, 359–369.
Allsopp, N., Stock, W., 1994. VA mycorrhizal infection in relation to edaphic characteristics and disturbance regime in three lowland plant communities in the south-western Cape, South Africa. J. Ecol. 271–279.
Andrieux, B., Beguin, J., Bergeron, Y., Grondin, P., Paré, D., 2018. Drivers of postfire soil organic carbon accumulation in the boreal forest. Glob. Change Biol. 24, 4797–4815.
Andriuzzi, W.S., Wall, D.H., 2017. Responses of belowground communities to large aboveground herbivores: Meta-analysis reveals biome-dependent patterns and critical research gaps. Glob. Change Biol. 23, 3857–3868.
Angst, G., Mueller, K.E., Eissenstat, D.M., Trumbore, S., Freeman, K.H., Hobbie, S.E., Chorover, J., Oleksyn, J., Reich, P.B., Mueller, C.W., 2019. Soil organic carbon stability in forests: Distinct effects of tree species identity and traits. Glob. Change Biol. 25, 1529–1546.
Aoyama, K., Yoshida, T., Harada, A., Noguchi, M., Miya, H., Shibata, H., 2011. Changes in carbon stock following soil scarification of non-wooded stands in Hokkaido, northern Japan. Journal of forest research 16, 35–45.
Ashwood, F., Watts, K., Park, K., Fuentes-Montemayor, E., Benham, S., Vanguelova, E.I., 2019. Woodland restoration on agricultural land: long-term impacts on soil quality. Restor. Ecol.
Assefa, D., Rewald, B., Sandén, H., Rosinger, C., Abiyu, A., Yitaferu, B., Godbold, D.L., 2017. Deforestation and land use strongly effect soil organic carbon and nitrogen stock in Northwest Ethiopia. Catena 153, 89–99.
Augusto, L., Davies, T., Delzon, S., De Schrijver, A., 2014. The enigma of the rise of angiosperms: can we untie the knot? Ecol. Lett. 17, 1326–1338.
Augusto, L., De Schrijver, A., Vesterdal, L., Smolander, A., Prescott, C., Ranger, J., 2015. Influences of evergreen gymnosperm and deciduous angiosperm tree species on the functioning of temperate and boreal forests. Biol. Rev. 90, 444–466.
Augusto, L., Dupouey, J.-L., Ranger, J., 2003. Effects of tree species on understory vegetation and environmental conditions in temperate forests. Annals of Forest Science 60, 823–831.
Ayres, E., Heath, J., Possell, M., Black, H.I.J., Kerstiens, G., Bardgett, R.D., 2004. Tree physiological responses to above-ground herbivory directly modify below-ground processes of soil carbon and nitrogen cycling. Ecol. Lett. 7, 469–479.
Baeten, L., Bruelheide, H., van der Plas, F., Kambach, S., Ratcliffe, S., Jucker, T., Allan, E., Ampoorter, E., Barbaro, L., Bastias, C.C., 2019. Identifying the tree species compositions that maximize ecosystem functioning in European forests. J. Appl. Ecol. 56, 733–744.
Balesdent, J., Basile-Doelsch, I., Chadoeuf, J., Cornu, S., Derrien, D., Fekiacova, Z., Hatté, C., 2018. Atmosphere–soil carbon transfer as a function of soil depth. Nature 559, 599.
Ball, B.A., Carrillo, Y., Molina, M., 2014. The influence of litter composition across the litter–soil interface on mass loss, nitrogen dynamics and the decomposer community. Soil Biol. Biochem. 69, 71–82.
Baral, S., Chhetri, B., Baral, H., Vacik, H., 2019. Investments in different taxonomies of goods: What should Nepal's community forest user groups prioritize? Forest Policy and Economics 100, 24–32.
Baral, S., Gautam, A., Vacik, H., 2018. Ecological and economical sustainability assessment of community forest management in Nepal: A reality check. J. Sustainable For. 37, 820–841.
Baral, S., Katzensteiner, K., 2015. Impact of biomass extraction on soil properties and foliar nitrogen content in a community forest and a semi-protected natural forest in the central mid-hills of Nepal. Trop. Ecol. 56, 323–333.
Barbero, R., Abatzoglou, J., Larkin, N., Kolden, C., Stocks, B., 2015. Climate change presents increased potential for very large fires in the contiguous United States. International Journal of Wildland Fire 24, 892–899.
Bárcena, T.G., Gundersen, P., Vesterdal, L., 2014a. Afforestation effects on SOC in former cropland: oak and spruce chronosequences resampled after 13 years. Glob. Change Biol. 20, 2938–2952.
Bárcena, T.G., Kiær, L.P., Vesterdal, L., Stefánsdóttir, H., Gundersen, P., Sigurdsson, B., 2014b. Soil carbon stock change following afforestation in Northern Europe: a meta-analysis. Glob. Change Biol. 20, 2393–2405.
Bardgett, R.D., Wardle, D.A., 2003. Herbivore-mediated linkages between aboveground and belowground communities. Ecology 84, 2258–2268.

Barré, P., Durand, H., Chenu, C., Meunier, P., Montagne, D., Castel, G., Billiou, D., Soucemarianadin, L., Cecillon, L., 2017. Geological control of soil organic carbon and nitrogen stocks at the landscape scale. Geoderma 285, 50–56.
Barré, P., Quénéa, K., Vidal, A., Cécillon, L., Christensen, B.T., Kätterer, T., Macdonald, A., Petit, L., Plante, A.F., van Oort, F., 2018. Microbial and plant-derived compounds both contribute to persistent soil organic carbon in temperate soils. Biogeochemistry 140, 81–92.
Bastin, J.-F., Berrahmouni, N., Grainger, A., Maniatis, D., Mollicone, D., Moore, R., Patriarca, C., Picard, N., Sparrow, B., Abraham, E.M., 2017. The extent of forest in dryland biomes. Science 356, 635–638.
Bastin, J.-F., Finegold, Y., Garcia, C., Mollicone, D., Rezende, M., Routh, D., Zohner, C.M., Crowther, T.W., 2019. The global tree restoration potential. Science 365, 76–79.
Bellassen, V., Luyssaert, S., 2014. Carbon sequestration: Managing forests in uncertain times. Nature News 506, 153.
Bentrup, G., Dosskey, M., Wells, G., Schoeneberger, M., 2012. Connecting landscape fragments through riparian zones. In: Stanturf, J., Lamb, D., Madsen, P. (Eds.), Forest Landscape Restoration. Springer, Dordrecht, pp. 93–109.
Berg, B., Kjønaas, O., Johansson, M.-B., Erhagen, B., Åkerblom, S., 2015. Late stage pine litter decomposition: Relationship to litter N, Mn, and acid unhydrolyzable residue (AUR) concentrations and climatic factors. For. Ecol. Manage. 358, 41–47.
Berg, B., Matzner, E., 1997. Effect of N deposition on decomposition of plant litter and soil organic matter in forest systems. Environmental Reviews 5, 1–25.
Berg, B., Staaf, H., Wessen, B., 1987. Decomposition and nutrient release in needle litter from nitrogen-fertilized Scots pine (Pinus sylvestris) stands. Scand. J. For. Res. 2, 399–415.
Bernier, P., Paré, D., Stinson, G., Bridge, S., Kishchuk, B., Lemprière, T., Thiffault, E., Titus, B., Vasbinder, W., 2017. Moving beyond the concept of "primary forest" as a metric of forest environment quality. Ecol. Appl. 27, 349–354.
Berthrong, S.T., Pineiro, G., Jobbágy, E.G., Jackson, R.B., 2012. Soil C and N changes with afforestation of grasslands across gradients of precipitation and plantation age. Ecol. Appl. 22, 76–86.
Binkley, D., 2005. How nitrogen-fixing trees change soil carbon. In: Binkley, D., Menyailo, O. (Eds.), Tree species effects on soils: implications for global changes. Kluwer Academic Publishers, Dordrecht, pp. 155–164.
Binkley, D., Burnham, H., Allen, H.L., 1999. Water quality impacts of forest fertilization with nitrogen and phosphorus. For. Ecol. Manage. 121, 191–213.
Binkley, D., Giardina, C., Bashkin, M.A., 2000. Soil phosphorus pools and supply under the influence of Eucalyptus saligna and nitrogen-fixing Albizia facaltaria. For. Ecol. Manage. 128, 241–247.
Binkley, D., Kaye, J., Barry, M., Ryan, M.G., 2004. First-rotation changes in soil carbon and nitrogen in a Eucalyptus plantation in Hawaii. Soil Sci. Soc. Am. J. 68, 1713–1719.
Binkley, D., Singer, F., Kaye, M., Rochelle, R., 2003. Influence of elk grazing on soil properties in Rocky Mountain National Park. For. Ecol. Manage. 185, 239–247.
Bird, M.I., Wynn, J.G., Saiz, G., Wurster, C.M., McBeath, A., 2015. The pyrogenic carbon cycle. Annu. Rev. Earth Planet. Sci. 43, 273–298.
Birdsey, R., Pan, Y., 2015. Trends in management of the world's forests and impacts on carbon stocks. For. Ecol. Manage. 355, 83–90.
Birhane, E., Treydte, A., Eshete, A., Solomon, N., Hailemariam, M., 2017. Can rangelands gain from bush encroachment? Carbon stocks of communal grazing lands invaded by Prosopis juliflora. J. Arid Environ. 141, 60–67.
Blume, H., Leinweber, P., 2004. Plaggen soils: landscape history, properties, and classification. J. Plant Nutr. Soil Sci. 167, 319–327.
Boča, A., Van Miegroet, H., Gruselle, M.-C., 2014. Forest overstory effect on soil organic carbon storage: A meta-analysis. Soil Sci. Soc. Am. J. 78, S35–S47.
Boerner, R.E., Huang, J., Hart, S.C., 2008. Fire, thinning, and the carbon economy: effects of fire and fire surrogate treatments on estimated carbon storage and sequestration rate. For. Ecol. Manage. 255, 3081–3097.
Boerner, R.E., Huang, J., Hart, S.C., 2009. Impacts of Fire and Fire Surrogate treatments on forest soil properties: a meta-analytical approach. Ecol. Appl. 19, 338–358.
Bradstock, R.A., Boer, M.M., Cary, G.J., Price, O.F., Williams, R.J., Barrett, D., Cook, G., Gill, A.M., Hutley, L., Keith, H., 2012. Modelling the potential for prescribed burning to mitigate carbon emissions from wildfires in fire-prone forests of Australia. International Journal of Wildland Fire 21, 629–639.
Bravo-Oviedo, A., Ruiz-Peinado, R., Modrego, P., Alonso, R., Montero, G., 2015. Forest thinning impact on carbon stock and soil condition in Southern European populations of P. sylvestris L. For. Ecol. Manage. 357, 259–267.
Bremner, J., Hauck, R., 1982. Advances in methodology for research on nitrogen transformations in soils. Nitrogen in agricultural soils 467–502.
Bruckman, V., Terada, T., Fukuda, K., Yamamoto, H., Hochbichler, E., 2016. Overmature periurban Quercus-Carpinus coppice forests in Austria and Japan: a comparison of carbon stocks, stand characteristics and conversion to high forest. Eur. J. Forest Res. 135, 857–869.
Bruckman, V., Yan, S., Hochbichler, E., Glatzel, G., 2011. Carbon pools and temporal dynamics along a rotation period in Quercus dominated high forest and coppice with standards stands. For. Ecol. Manage. 262, 1853–1862.
Brunel, C., Gros, R., Ziarelli, F., Da Silva, A.M.F., 2017. Additive or non-additive effect of mixing oak in pine stands on soil properties depends on the tree species in Mediterranean forests. Sci. Total Environ. 590, 676–685.
Burgess, D., Baldock, J., Wetzell, S., Brand, D., 1995. Scarification, fertilization and herbicide treatment effects on planted conifers and soil fertility. Plant Soil 168, 513–522.
Burgi, M., Gimmi, U., 2007. Three objectives of historical ecology: the case of litter collecting in Central European forests. Landscape Ecol. 22, 77–87.
Campbell, J., Donato, D., Azuma, D., Law, B., 2007. Pyrogenic carbon emission from a large wildfire in Oregon, United States. Journal of Geophysical Research. Biogeosciences 112.
Campbell, R., Porter, R., 1982. Low-temperature scanning electron microscopy of microorganisms in soil. Soil Biol. Biochem. 14, 241–245.
Canadell, J., Jackson, R., Ehleringer, J., Mooney, H., Sala, O., Schulze, E.-D., 1996. Maximum rooting depth of vegetation types at the global scale. Oecologia 108, 583–595.
Cardenas, E., Kranabetter, J.M., Hope, G., Maas, K.R., Hallam, S., Mohn, W.W., 2015. Forest harvesting reduces the soil metagenomic potential for biomass decomposition. The ISME Journal 9, 2465–2476.
Carline, K.A., Bardgett, R.D., 2005. Changes in tree growth resulting from simulated browsing have limited effects on soil biological properties. Soil Biol. Biochem. 37, 2306–2314.
Carlyle, J.C., 1993. Organic carbon in forested sandy soils: properties, processes, and the impact of forest management. N. Z. J. For. Sci. 23, 12.
Carreiro, M., Sinsabaugh, R., Repert, D., Parkhurst, D., 2000. Microbial enzyme shifts explain litter decay responses to simulated nitrogen deposition. Ecology 81, 2359–2365.
Cécillon, L., Soucémarianadin, L.N., Berthelot, A., Duverger, M., De Boisseson, J.M., Gosselin, F., Guenet, B., Barthès, B., De Danieli, S., Barrier, R., Abiven, S., Chenu, C., Girardin, C., Baudin, F., Savignac, F., Nicolas, M., Mériguet, J., Barré, P., 2017. piCaSo : pilotage sylvicole et contrôle pédologique des stocks de carbone des sols forestiers. In, Report ADEME, 103.
Certini, G., 2005. Effects of fire on properties of forest soils: a review. Oecologia 143, 1–10.
Chapin, F.S.I., Autumn, K., Pugnaire, F., 1993. Evolution of suites of traits in response to environmental stress. Am. Nat. 142, S78–S92.
Chapman, S., Bell, J., Campbell, C., Hudson, G., Lilly, A., Nolan, A., Robertson, A., Potts, J., Towers, W., 2013. Comparison of soil carbon stocks in S cottish soils between 1978 and 2009. Eur. J. Soil Sci. 64, 455–465.
Chen, H., Li, D., Zhao, J., Xiao, K., Wang, K., 2018. Effects of nitrogen addition on activities of soil nitrogen acquisition enzymes: A meta-analysis. Agric. Ecosyst. Environ. 252, 126–131.
Cheng, X., Yu, M., Wu, T., 2013. Effect of forest structural change on carbon storage in a coastal Metasequoia glyptostroboides stand. ScientificWorldJournal 830509.
Chenu, C., Rumpel, C., Lehmann, J., 2015. Methods for studying soil organic matter: nature, dynamics, spatial accessibility, and interactions with minerals. In: Paul, E.A. (Ed.), Soil microbiology, ecology and biochemistry. Academic Press San Diego, pp. 383–419.
Chiti, T., Perugini, L., Vespertino, D., Valentini, R., 2015. Effect of selective logging on soil organic carbon dynamics in tropical forests in central and western Africa. Plant Soil 399, 283–294.
Christophel, D., Höllerl, S., Prietzel, J., Steffens, M., 2015. Long-term development of soil organic carbon and nitrogen stocks after shelterwood- and clear-cutting in a mountain forest in the Bavarian Limestone Alps. Eur. J. Forest Res. 134, 623–640.
Clarke, N., Gundersen, P., Jönsson-Belyazid, U., Kjønaas, O.J., Persson, T., Sigurdsson, B.D., Stupak, I., Vesterdal, L., 2015. Influence of different tree-harvesting intensities on forest soil carbon stocks in boreal and northern temperate forest ecosystems. For. Ecol. Manage. 351, 9–19.
Cleary, M., Arhipova, N., Morrison, D., Thomsen, I.M., Sturrock, R., Vasaitis, R., Gaitnieks, T., Stenlid, J., 2013. Stump removal to control root disease in Canada and Scandinavia: A synthesis of results from long-term trials. For. Ecol. Manage. 290, 5–14.
Cleveland, C.C., Liptzin, D., 2007. C: N: P stoichiometry in soil: is there a "Redfield ratio" for the microbial biomass? Biogeochemistry 85, 235–252.
Cochrane, M.A., Laurance, W.F., 2008. Synergisms among fire, land use, and climate change in the Amazon. Ambio 37, 522–527.
Coen, J., 2018. Some requirements for simulating wildland fire behavior using insight from coupled weather—Wildland fire models. Fire 1, 6.
Compton, J.E., Church, M.R., Larned, S.T., Hogsett, W.E., 2003. Nitrogen export from forested watersheds in the Oregon Coast Range: the role of N 2-fixing red alder. Ecosystems 6, 773–785.
Cook, R.L., Binkley, D., Mendes, J.C.T., Stape, J.L., 2014. Soil carbon stocks and forest biomass following conversion of pasture to broadleaf and conifer plantations in southeastern Brazil. For. Ecol. Manage. 324, 37–45.
Cook, R.L., Binkley, D., Stape, J.L., 2016. Eucalyptus plantation effects on soil carbon after 20 years and three rotations in Brazil. In 92–98.
Côté, S.D., Rooney, T.P., Tremblay, J.-P., Dussault, C., Waller, D.M., 2004. Ecological impacts of deer overabundance. Annu. Rev. Ecol. Evol. Syst. 35, 113–147.
Cotrufo, M.F., Soong, J.L., Horton, A.J., Campbell, E.E., Haddix, M.L., Wall, D.H., Parton, W.J., 2015. Formation of soil organic matter via biochemical and physical pathways of litter mass loss. Nature Geosci 8, 776–779.
Cotrufo, M.F., Wallenstein, M.D., Boot, C.M., Denef, K., Paul, E., 2013. The Microbial Efficiency-Matrix Stabilization (MEMS) framework integrates plant litter decomposition with soil organic matter stabilization: do labile plant inputs form stable soil organic matter? Glob. Change Biol. 19, 988–995.
Cowie, A.L., Smith, P., Johnson, D., 2006. Does soil carbon loss in biomass production systems negate the greenhouse benefits of bioenergy? Mitig Adapt Strateg Glob Change 11, 979–1002.
Craig, M.E., Turner, B.L., Liang, C., Clay, K., Johnson, D.J., Phillips, R.P., 2018. Tree mycorrhizal type predicts within-site variability in the storage and distribution of soil organic matter. Glob. Change Biol. 24, 3317–3330.
Craine, J.M., Morrow, C., Fierer, N., 2007. Microbial nitrogen limitation increases decomposition. Ecology 88, 2105–2113.
Cusack, D.F., Silver, W.L., Torn, M.S., McDowell, W.H., 2011. Effects of nitrogen additions on above-and belowground carbon dynamics in two tropical forests. Biogeochemistry 104, 203–225.

Czimczik, C.I., Masiello, C.A., 2007. Controls on black carbon storage in soils. Global Biogeochem. Cycles 21.
Czimczik, C.I., Preston, C.M., Schmidt, M.W., Schulze, E.D., 2003. How surface fire in Siberian Scots pine forests affects soil organic carbon in the forest floor: Stocks, molecular structure, and conversion to black carbon (charcoal). Global Biogeochem. Cycles 17.
Dahlberg, A., Schimmel, J., Taylor, A.F., Johannesson, H., 2001. Post-fire legacy of ectomycorrhizal fungal communities in the Swedish boreal forest in relation to fire severity and logging intensity. Biol. Conserv. 100, 151–161.
Davies, K.W., Boyd, C.S., Bates, J.D., Hulet, A., 2016. Winter grazing can reduce wildfire size, intensity and behaviour in a shrub-grassland. International Journal of Wildland Fire 25, 191–199.
Dawud, S.M., Raulund-Rasmussen, K., Domisch, T., Finér, L., Jaroszewicz, B., Vesterdal, L., 2016. Is tree species diversity or species identity the more important driver of soil carbon stocks, C/N ratio, and pH? Ecosystems 19, 645–660.
Dawud, S.M., Raulund-Rasmussen, K., Ratcliffe, S., Domisch, T., Finér, L., Joly, F.X., Hättenschwiler, S., Vesterdal, L., 2017. Tree species functional group is a more important driver of soil properties than tree species diversity across major European forest types. Funct. Ecol. 31, 1153–1162.
de Coninck, H., Revi, A., Babiker, M., Bertoldi, P., Buckeridge, M., Cartwright, A., Dong, W., Ford, J., Fuss, S., Hourcade, J.-C., Ley, D., Mechler, R., Newman, P., Revokatova, A., Schultz, S., Steg, L., Sugiyama, T., 2018. Strengthening and Implementing the Global Response. Intergovernmental Panel on. Climate Change.
De Vos, B., Cools, N., Ilvesniemi, H., Vesterdal, L., Vanguelova, E., Carnicelli, S., 2015. Benchmark values for forest soil carbon stocks in Europe: Results from a large scale forest soil survey. Geoderma 251, 33–46.
de Vries, W., Solberg, S., Dobbertin, M., Sterba, H., Laubhann, D., Van Oijen, M., Evans, C., Gundersen, P., Kros, J., Wamelink, G., 2009. The impact of nitrogen deposition on carbon sequestration by European forests and heathlands. For. Ecol. Manage. 258, 1814–1823.
Dean, C., Kirkpatrick, J.B., Friedland, A.J., 2017. Conventional intensive logging promotes loss of organic carbon from the mineral soil. Glob. Change Biol. 23, 1–11.
DeForest, J.L., Zak, D.R., Pregitzer, K.S., Burton, A.J., 2004. Atmospheric nitrate deposition, microbial community composition, and enzyme activity in northern hardwood forests. Soil Sci. Soc. Am. J. 68, 132–138.
Devine, W.D., Harrington, C.A., 2007. Influence of harvest residues and vegetation on microsite soil and air temperatures in a young conifer plantation. Agric. For. Meteorol. 145, 125–138.
Dickinson, M.B., Ryan, K.C., 2010. Introduction: strengthening the foundation of wildland fire effects prediction for research and management. Fire Ecology 6, 1–12.
Don, A., Schumacher, J., Freibauer, A., 2011. Impact of tropical land-use change on soil organic carbon stocks–a meta-analysis. Glob. Change Biol. 17, 1658–1670.
Dooley, S.R., Treseder, K.K., 2012. The effect of fire on microbial biomass: a meta-analysis of field studies. Biogeochemistry 109, 49–61.
Doso Jnr, S., 2014. Land degradation and agriculture in the Sahel of Africa: causes, impacts and recommendations. Journal of Agricultural Science and Applications 03, 67–73.
Dungait, J.A.J., Hopkins, D.W., Gregory, A.S., Whitmore, A.P., 2012. Soil organic matter turnover is governed by accessibility not recalcitrance. Glob. Change Biol. 18, 1781–1796.
Dwomoh, F.K., Wimberly, M.C., 2017. Fire regimes and forest resilience: alternative vegetation states in the West African tropics. Landscape Ecol. 32, 1849–1865.
Ebermayer, E., 1876. Lehre der Waldstreu mit Rücksicht auf die chemische Statik des Waldbaues. Springer, Berlin.
Epron, D., Mouanda, C., Mareschal, L., Koutika, L.-S., 2015. Impacts of organic residue management on the soil C dynamics in a tropical eucalypt plantation on a nutrient-poor sandy soil after three rotations. Soil Biol. Biochem. 85, 183–189.
Epron, D., Nouvellon, Y., Mareschal, L., E moreira, R.M., Koutika, L.-S., Geneste, B., Delgado-Rojas, J.S., Laclau, J.-P., Sola, G., de Moraes Goncalves, J.L., 2013. Partitioning of net primary production in Eucalyptus and Acacia stands and in mixed-species plantations: two case-studies in contrasting tropical environments. For. Ecol. Manage. 301, 102–111.
Esquilín, J., Aida, E., Stromberger, M.E., Shepperd, W.D., 2008. Soil scarification and wildfire interactions and effects on microbial communities and carbon. Soil Sci. Soc. Am. J. 72, 111–118.
Evans, A.M., Perschel, R.T., Kittler, B.A., 2013. Overview of forest biomass harvesting guidelines. J. Sustainable For. 32, 89–107.
Farooq, T., Ma, X., Rashid, M., Wu, W., Xu, J., Tarin, M., He, Z., Wu, P., 2019. IMPACT OF STAND DENSITY ON SOIL QUALITY IN CHINESE FIR (CUNNINGHAMIA LANCEOLATA) MONOCULTURE. APPLIED ECOLOGY AND ENVIRONMENTAL RESEARCH 17, 3553–3566.
Felipe-Lucia, M.R., Soliveres, S., Penone, C., Manning, P., van der Plas, F., Boch, S., Prati, D., Ammer, C., Schall, P., Gossner, M.M., 2018. Multiple forest attributes underpin the supply of multiple ecosystem services. Nat. Commun. 9, 4839.
Fiedler, H., Fiedler, E., Hoffmann, F., Höhne, H., Sauer, G., Thomasius, H., 1962. Auswertung eines Streunutzungsversuches von H. Vater aus dem Jahre 1912. Archiv für Forstwesen 11, 70–128.
Finér, L., Domisch, T., Dawud, S.M., Raulund-Rasmussen, K., Vesterdal, L., Bouriaud, O., Bruelheide, H., Jaroszewicz, B., Selvi, F., Valladares, F., 2017. Conifer proportion explains fine root biomass more than tree species diversity and site factors in major European forest types. For. Ecol. Manage. 406, 330–350.
Flannigan, M., Stocks, B., Turetsky, M., Wotton, M., 2009. Impacts of climate change on fire activity and fire management in the circumboreal forest. Glob. Change Biol. 15, 549–560.
Flannigan, M., Wotton, B., Marshall, G., De Groot, W., Johnston, J., Jurko, N., Cantin, A., 2016. Fuel moisture sensitivity to temperature and precipitation: climate change implications. Clim. Change 134, 59–71.
Foereid, B., Lehmann, J., Major, J., 2011. Modeling black carbon degradation and movement in soil. Plant Soil 345, 223–236.
Fog, K., 1988. The effect of added nitrogen on the rate of decomposition of organic matter. Biol. Rev. 63, 433–462.
Forrester, D., Pares, A., Ohara, C., Khanna, P., Bauhus, J., 2013. Soil organic carbon is increased in mixed-species plantations of Eucalyptus and nitrogen-fixing Acacia. Ecosystems 16, 123–132.
Foster, R., Rovira, A., Cock, T., 1983. Ultrastructure of the root-soil interface. American Phytopathological Society.
Foster, R.C., Martin, J.K., 1981. In situ analysis of soil components of biological origin. In: Paul, E.A., Ladd, J.N. (Eds.), Soil biochemistry. Marcel Dekker, New York, pp. 75–112.
Frey, S.D., Ollinger, S., Nadelhoffer, K., Bowden, R., Brzostek, E., Burton, A., Caldwell, B., Crow, S., Goodale, C.L., Grandy, A.S., 2014. Chronic nitrogen additions suppress decomposition and sequester soil carbon in temperate forests. Biogeochemistry 121, 305–316.
Frouz, J., Livečková, M., Albrechtová, J., Chroňáková, A., Cajthaml, T., Pižl, V., Háněl, L., Starý, J., Baldrian, P., Lhotáková, Z., 2013. Is the effect of trees on soil properties mediated by soil fauna? A case study from post-mining sites. For. Ecol. Manage. 309, 87–95.
Frouz, J., Pižl, V., Cienciala, E., Kalčík, J., 2009. Carbon storage in post-mining forest soil, the role of tree biomass and soil bioturbation. Biogeochemistry 94, 111–121.
Gahagan, A., Giardina, C.P., King, J.S., Binkley, D., Pregitzer, K.S., Burton, A.J., 2015. Carbon fluxes, storage and harvest removals through 60 years of stand development in red pine plantations and mixed hardwood stands in Northern Michigan, USA. For. Ecol. Manage. 337, 88–97.
Gamfeldt, L., Snäll, T., Bagchi, R., Jonsson, M., Gustafsson, L., Kjellander, P., Ruiz-Jaen, M.C., Fröberg, M., Stendahl, J., Philipson, C.D., 2013. Higher levels of multiple ecosystem services are found in forests with more tree species. Nat. Commun. 4, 1340.
Gao, B., Taylor, A.R., Searle, E.B., Kumar, P., Ma, Z., Hume, A.M., Chen, H.Y., 2018. Carbon storage declines in old boreal forests irrespective of succession pathway. Ecosystems 21, 1168–1182.
Gao, W., Yang, H., Kou, L., Li, S., 2015. Effects of nitrogen deposition and fertilization on N transformations in forest soils: a review. J. Soils Sediments 15, 863–879.
Gass, T.M., Binkley, D., 2011. Soil nutrient losses in an altered ecosystem are associated with native ungulate grazing. J. Appl. Ecol. 48, 952–960.
Gebeyehu, G., Soromessa, T., Bekele, T., Teketay, D., 2019. Carbon stocks and factors affecting their storage in dry Afromontane forests of Awi Zone, northwestern Ethiopia. Journal of Ecology and Environment 43, 7.
Geldenhuys, C.J., Atsame-Edda, A., Mugure, M.W., 2017. Facilitating the recovery of natural evergreen forests in South Africa via invader plant stands. Forest Ecosystems 4, 21.
Germon, A., Guerrini, I.A., Bordron, B., Bouillet, J.-P., Nouvellon, Y., de Moraes Gonçalves, J.L., Jourdan, C., Paula, R.R., Laclau, J.-P., 2018. Consequences of mixing Acacia mangium and Eucalyptus grandis trees on soil exploration by fine-roots down to a depth of 17 m. Plant Soil 424, 203–220.
Giardina, C.P., Huffman, S., Binkley, D., Caldwell, B.A., 1995. Alders increase soil phosphorus availability in a Douglas-fir plantation. Can. J. For. Res. 25, 1652–1657.
Gibson, C., Hatton, P.-J., Bird, J., Nadelhoffer, K., Ward, C., Stark, R., Filley, T., 2018. Interacting controls of pyrolysis temperature and plant taxa on the degradability of PyOM in fire-prone northern temperate forest soil. Soil Systems 2, 48.
Giglio, L., Randerson, J.T., van der Werf, G.R., 2013. Analysis of daily, monthly, and annual burned area using the fourth-generation global fire emissions database (GFED4). J. Geophys. Res. Biogeosci. 118, 317–328.
Gimmi, U., Poulter, B., Wolf, A., Portner, H., Weber, P., Burgi, M., 2013. Soil carbon pools in Swiss forests show legacy effects from historic forest litter raking. Landscape Ecol. 28, 835–846.
Giri, A., Katzensteiner, K., 2013. Carbon and Nitrogen Flow in the Traditional Land Use System of the Himalaya Region. Nepal. Mountain Research and Development 33, 381–390.
Glatzel, G., 1990. The nitrogen status of Austrian forest ecosystems as influenced by atmospheric deposition, biomass harvesting and lateral organomass exchange. Plant Soil 128, 67–74.
Glatzel, G., 1991. The impact of historic land use and modern forestry on nutrient relations of Central European forest ecosystems. Fertilizer research 27, 1–8.
Gleixner, G., 2013. Soil organic matter dynamics: a biological perspective derived from the use of compound-specific isotopes studies. Ecol. Res. 28, 683–695.
González-Pérez, J.A., González-Vila, F.J., Almendros, G., Knicker, H., 2004. The effect of fire on soil organic matter—a review. Environ. Int. 30, 855–870.
González, I.G., Corbí, J.G., Cancio, A.F., Ballesta, R.J., Cascón, M.G., 2012. Soil carbon stocks and soil solution chemistry in Quercus ilex stands in Mainland Spain. Eur. J. Forest Res. 131, 1653–1667.
Gonzalez, P., 2001. Desertification and shift of forest species in the West African Sahel. Climate Research - CLIMATE RES 17, 217–228.
Görres, J.H., Savin, M.C., Neher, D.A., Weicht, T.R., Amador, J.A., 1999. Grazing in a porous environment: 1. The effect of soil pore structure on C and N mineralization. Plant Soil 212, 75–83.
Gross, C.D., Harrison, R.B., 2019. The Case for Digging Deeper: Soil Organic Carbon Storage, Dynamics, and Controls in Our Changing World. Soil Systems 3, 28.
Gross, C.D., James, J.N., Turnblom, E.C., Harrison, R.B., 2018. Thinning treatments reduce deep soil carbon and nitrogen stocks in a coastal pacific northwest forest. Forests 9.
Guckland, A., Jacob, M., Flessa, H., Thomas, F.M., Leuschner, C., 2009. Acidity, nutrient stocks, and organic-matter content in soils of a temperate deciduous forest with

different abundance of European beech (Fagus sylvatica L.). J. Plant Nutr. Soil Sci. 172, 500–511.
Guidi, C., Magid, J., Rodeghiero, M., Gianelle, D., Vesterdal, L., 2014. Effects of forest expansion on mountain grassland: changes within soil organic carbon fractions. Plant Soil 385, 373–387.
Guo, L.B., Gifford, R., 2002. Soil carbon stocks and land use change: a meta analysis. Glob. Change Biol. 8, 345–360.
Haddaway, N.R., Burden, A., Evans, C.D., Healey, J.R., Jones, D.L., Dalrymple, S.E., Pullin, A.S., 2014. Evaluating effects of land management on greenhouse gas fluxes and carbon balances in boreo-temperate lowland peatland systems. Environmental Evidence 3, 5.
Haddix, M.L., Paul, E.A., Cotrufo, M.F., 2016. Dual, differential isotope labeling shows the preferential movement of labile plant constituents into mineral-bonded soil organic matter. Glob. Change Biol. 22, 2301–2312.
Haddix, M.L., Plante, A.F., Conant, R.T., Six, J., Steinweg, J.M., Magrini-Bair, K., Drijber, R.A., Morris, S.J., Paul, E.A., 2011. The role of soil characteristics on temperature sensitivity of soil organic matter. Soil Sci. Soc. Am. J. 75, 56–68.
Hagedorn, F., Spinnler, D., Siegwolf, R., 2003. Increased N deposition retards mineralization of old soil organic matter. Soil Biol. Biochem. 35, 1683–1692.
Hannam, J., Vanguelova, E., Niziolomski, J., Keay, C., 2016. Assessment of soil carbon stocks after afforestation in England and Wales. In, United Kingdom report to Forest Research The National Soil Resources. Institute, Cranfield.
Hansen, K., Vesterdal, L., Schmidt, I.K., Gundersen, P., Sevel, L., Bastrup-Birk, A., Pedersen, L.B., Bille-Hansen, J., 2009. Litterfall and nutrient return in five tree species in a common garden experiment. For. Ecol. Manage. 257, 2133–2144.
Harrison, K.A., Bardgett, R.D., 2004. Browsing by red deer negatively impacts on soil nitrogen availability in regenerating native forest. Soil Biol. Biochem. 36, 115–126.
Harrison, R., Richter, D., Fox, T., 2011. Deep soils. Forest Science 57, 1.
Hemingway, J.D., Rothman, D.H., Grant, K.E., Rosengard, S.Z., Eglinton, T.I., Derry, L.A., Galy, V.V., 2019. Mineral protection regulates long-term global preservation of natural organic carbon. Nature 570, 228–231.
Hernández, J., del Pino, A., Vance, E.D., Califra, Á., Del Giorgio, F., Martínez, L., González-Barrios, P., 2016. Eucalyptus and Pinus stand density effects on soil carbon sequestration. For. Ecol. Manage. 368, 28–38.
Hiltbrunner, E., Aerts, R., Bühlmann, T., Huss-Danell, K., Magnusson, B., Myrold, D.D., Reed, S.C., Sigurdsson, B.D., Körner, C., 2014. Ecological consequences of the expansion of N 2-fixing plants in cold biomes. Oecologia 176, 11–24.
Hoffman, C., Sieg, C., Linn, R., Mell, W., Parsons, R., Ziegler, J., Hiers, J., 2018. Advancing the science of wildland fire dynamics using process-based models. Fire 1, 32.
Hoffmann, T., Schlummer, M., Notebaert, B., Verstraeten, G., Korup, O., 2013. Carbon burial in soil sediments from Holocene agricultural erosion, Central Europe. Global Biogeochem. Cycles 27, 828–835.
Hofmeister, J., Oulehle, F., Krám, P., Hruška, J., 2008. Loss of nutrients due to litter raking compared to the effect of acidic deposition in two spruce stands, Czech Republic. Biogeochemistry 88, 139–151.
Högberg, P., Nordgren, A., Buchmann, N., Taylor, A.F.S., Ekblad, A., Hogberg, M.N., Nyberg, G., Ottosson-Lofvenius, M., Read, D.J., 2001. Large-scale forest girdling shows that current photosynthesis drives soil respiration. Nature 411, 789–792.
Holden, S.R., Treseder, K.K., 2013. A meta-analysis of soil microbial biomass responses to forest disturbances. Front. Microbiol. 4, 163.
Hommeltenberg, J., Schmid, H., Drösler, M., Werle, P., 2014. Can a bog drained for forestry be a stronger carbon sink than a natural bog forest? Biogeosciences 11, 3477–3493.
Hoover, C.M., 2011. Management impacts on forest floor and soil organic carbon in northern temperate forests of the US. Carbon Balance Manage. 6, 17.
Hoscilo, A., Page, S.E., Tansey, K.J., Rieley, J.O., 2011. Effect of repeated fires on land-cover change on peatland in southern Central Kalimantan, Indonesia, from 1973 to 2005. International Journal of Wildland Fire 20, 578–588.
Huang, Z., Clinton, P.W., Baisden, W.T., Davis, M.R., 2011. Long-term nitrogen additions increased surface soil carbon concentration in a forest plantation despite elevated decomposition. Soil Biol. Biochem. 43, 302–307.
Hulvey, K.B., Hobbs, R.J., Standish, R.J., Lindenmayer, D.B., Lach, L., Perring, M.P., 2013. Benefits of tree mixes in carbon plantings. Nat. Clim. Change 3, 869–874.
Hume, A.M., Chen, H.Y., Taylor, A.R., 2018. Intensive forest harvesting increases susceptibility of northern forest soils to carbon, nitrogen and phosphorus loss. J. Appl. Ecol. 55, 246–255.
Hyvönen, R., Kaarakka, L., Leppälammi-Kujansuu, J., Olsson, B.A., Palviainen, M., Vegerfors-Persson, B., Helmisaari, H.-S., 2016. Effects of stump harvesting on soil C and N stocks and vegetation 8–13 years after clear-cutting. For. Ecol. Manage. 371, 23–32.
IPCC, 2007. Climate Change 2007: The Physical Science Basis. Contribution of Working group I to the Fourth Assessment Report of the Intergovernmental Panel on Climate. Change. Cambridge University Press, Cambridge, UK and New York, NY, USA.
IPCC, 2011. IPCC special report on renewable energy sources and climate change mitigation. Cambridge University Press, Cambridge University Press, Cambridge, United Kingdom and New York, NY, USA.
IPCC, 2014. 2013 supplement to the 2006 IPCC guidelines for national greenhouse gas inventories: Wetlands. In: Hiraishi, T., Krug, T., Tanabe, K., Srivastava, N., Baasansuren, J., Fukuda, M., Troxler, T. (Eds.), IPCC. Switzerland.
IUFRO, 2018. Global fire challenges in a warming world. In: Robinne, F.-.N., Burns, J., Kaant, P., de Groot, B., Flannigan, M., Kleine, M., Wooten, D. (Eds.), Occasional Paper 32. International Union of Forest Research Organizations, Vienna.
Jackson, R., Canadell, J., Ehleringer, J.R., Mooney, H., Sala, O., Schulze, E.D., 1996. A global analysis of root distributions for terrestrial biomes. Oecologia 108, 389–411.
Jackson, R.B., Lajtha, K., Crow, S.E., Hugelius, G., Kramer, M.G., Piñeiro, G., 2017. The ecology of soil carbon: pools, vulnerabilities, and biotic and abiotic controls. Annu. Rev. Ecol. Evol. Syst. 48, 419–445.
Jacob, A., Hertel, D., Leuschner, C., 2013. On the significance of belowground overyielding in temperate mixed forests: separating species identity and species diversity effects. Oikos 122, 463–473.
James, J., Harrison, R., 2016. The effect of harvest on forest soil carbon: A meta-analysis. Forests 7, 308.
James, J.N., Gross, C.D., Dwivedi, P., Myers, T., Santos, F., Bernardi, R., Faria, M.F.D., Guerrini, I.A., Harrison, R., Butman, D., 2019. Land use change alters the radiocarbon age and composition of soil and water-soluble organic matter in the Brazilian Cerrado. Geoderma 345, 38–50.
James, J.N., Kates, N., Kuhn, C.D., Littlefield, C.E., Miller, C.W., Bakker, J.D., Butman, D.E., Haugo, R.D., 2018. The effects of forest restoration on ecosystem carbon in western North America: A systematic review. For. Ecol. Manage. 429, 625–641.
Jandl, R., Lindner, M., Vesterdal, L., Bauwens, B., Baritz, R., Hagedorn, F., Johnson, D.W., Minkkinen, K., Byrne, K.A., 2007. How strongly can forest management influence soil carbon sequestration? Geoderma 137, 253–268.
Janssens, I., Dieleman, W., Luyssaert, S., Subke, J.-A., Reichstein, M., Ceulemans, R., Ciais, P., Dolman, A.J., Grace, J., Matteucci, G., 2010. Reduction of forest soil respiration in response to nitrogen deposition. Nat. Geosci. 3, 315.
Jastrow, J.D., Amonette, J.E., Bailey, V.L., 2007. Mechanisms controlling soil carbon turnover and their potential application for enhancing carbon sequestration. Clim. Change 80, 5–23.
Johansson, M.B., 1994. The influence of soil scarification on the turn-over rate of slash needles and nutrient release. Scand. J. For. Res. 9, 170–179.
Johnson, D., Curtis, P., 2001. Effects of forest management on soil C and N storage: meta analysis. For. Ecol. Manage. 140, 227–238.
Johnson, D., Murphy, J.D., Walker, R.F., Glass, D.W., Miller, W.W., 2007. Wildfire effects on forest carbon and nutrient budgets. Ecol. Eng. 31, 183–192.
Johnson, D.W., 1992. Effects of forest management on soil carbon storage. In, Natural Sinks of CO2. Springer, pp. 83-120.
Jucker, T., Bouriaud, O., Avacaritei, D., Coomes, D.A., 2014. Stabilizing effects of diversity on aboveground wood production in forest ecosystems: linking patterns and processes. Ecol. Lett. 17, 1560–1569.
Jurevics, A., Peichl, M., Olsson, B.A., Strömgren, M., Egnell, G., 2016. Slash and stump harvest have no general impact on soil and tree biomass C pools after 32–39 years. For. Ecol. Manage. 371, 33–41.
Jurgensen, M., Tarpey, R., Pickens, J., Kolka, R., Palik, B., 2012. Long-term Effect of Silvicultural Thinnings on Soil Carbon and Nitrogen Pools. Soil Sci. Soc. Am. J. 76, 1418–1425.
Kaarakka, L., Hyvönen, R., Strömgren, M., Palviainen, M., Persson, T., Olsson, B.A., Launonen, E., Vegerfors, B., Helmisaari, H.-S., 2016. Carbon and nitrogen pools and mineralization rates in boreal forest soil after stump harvesting. For. Ecol. Manage. 377, 61–70.
Kallenbach, C.M., Frey, S.D., Grandy, A.S., 2016. Direct evidence for microbial-derived soil organic matter formation and its ecophysiological controls. Nat. Commun. 7, 13630.
Katzensteiner, K., 2003. Effects of harvesting on nutrient leaching in a Norway spruce (Picea abies Karst.) ecosystem on a Lithic Leptosol in the Northern Limestone Alps. Plant Soil 250, 59–73.
Katzensteiner, K., Englisch, M., 2007. Sustainable biomass production from forests: lessons from historical experience and challenges for ecological research. Centralblatt für das gesamte Forstwesen (Austrian Journal of Forest Sciences) 124, 199-212.
Keeley, J.E., 2009. Fire intensity, fire severity and burn severity: a brief review and suggested usage. Int. J. Wildland Fire 18, 116–126.
Keenan, R.J., Reams, G.A., Achard, F., de Freitas, J.V., Grainger, A., Lindquist, E., 2015. Dynamics of global forest area: Results from the FAO Global Forest Resources Assessment 2015. For. Ecol. Manage. 352, 9–20.
Kelleher, B.P., Simpson, A.J., 2006. Humic substances in soils: are they really chemically distinct? Environ. Sci. Technol. 40, 4605–4611.
Khabarov, N., Krasovskii, A., Obersteiner, M., Swart, R., Dosio, A., San-Miguel-Ayanz, J., Durrant, T., Camia, A., Migliavacca, M., 2016. Forest fires and adaptation options in Europe. Reg. Environ. Change 16, 21–30.
Kielland, K., Bryant, J.P., 1998. Moose herbivory in taiga: effects on biogeochemistry and vegetation dynamics in primary succession. Oikos 377–383.
Kim, S., Han, S.H., Li, G., Yoon, T.K., Lee, S.-T., Kim, C., Son, Y., 2016. Effects of thinning intensity on nutrient concentration and enzyme activity in Larix kaempferi forest soils. Journal of. Ecology and Environment 40.
Kishchuk, B., Morris, D., Lorente, M., Keddy, T., Sidders, D., Quideau, S., Thiffault, E., Kwiaton, M., Maynard, D., 2016. Disturbance intensity and dominant cover type influence rate of boreal soil carbon change: A Canadian multi-regional analysis. For. Ecol. Manage. 381, 48–62.
Kleber, M., Sollins, P., Sutton, R., 2007. A conceptual model of organo-mineral interactions in soils: self-assembly of organic molecular fragments into zonal structures on mineral surfaces. Biogeochemistry 85, 9–24.
Klein, D., Fuentes, J.P., Schmidt, A., Schmidt, H., Schulte, A., 2008. Soil organic C as affected by silvicultural and exploitative interventions in Nothofagus pumilio forests of the Chilean Patagonia. For. Ecol. Manage. 255, 3549–3555.
Knorr, M., Frey, S., Curtis, P., 2005. Nitrogen additions and litter decomposition: a meta-analysis. Ecology 86, 3252–3257.
Kohout, P., Charvátová, M., Štursová, M., Mašínová, T., Tomšovský, M., Baldrian, P., 2018. Clearcutting alters decomposition processes and initiates complex restructuring of fungal communities in soil and tree roots. The ISME Journal 12, 692–703.
Kooijman, A., Smit, A., 2001. Grazing as a measure to reduce nutrient availability and plant productivity in acid dune grasslands and pine forests in The Netherlands. Ecol. Eng. 17, 63–77.

Köster, E., Köster, K., Aurela, M., Laurila, T., Berninger, F., Lohila, A., Pumpanen, J., 2013. Impact of reindeer herding on vegetation biomass and soil carbon content: a case study from Sodankylä. Finland, Boreal Environment Research.
Kou-Giesbrecht, S., Menge, D., 2019. Nitrogen-fixing trees could exacerbate climate change under elevated nitrogen deposition. Nat. Commun. 10, 1493.
Koutika, L.-S., Epron, D., Bouillet, J.-P., Mareschal, L., 2014. Changes in N and C concentrations, soil acidity and P availability in tropical mixed acacia and eucalypt plantations on a nutrient-poor sandy soil. Plant Soil 379, 205–216.
Koutika, L.-S., Mareschal, L., Epron, D., 2016. Soil P availability under eucalypt and acacia on Ferralic Arenosols, republic of the Congo. Geoderma Regional 7, 153–158.
Kravchenko, A., Guber, A., Razavi, B., Koestel, J., Quigley, M., Robertson, G., Kuzyakov, Y., 2019. Microbial spatial footprint as a driver of soil carbon stabilization. Nat. Commun. 10, 1–10.
Kulmala, L., Aaltonen, H., Berninger, F., Kieloaho, A.-J., Levula, J., Bäck, J., Hari, P., Kolari, P., Korhonen, J.F.J., Kulmala, M., Nikinmaa, E., Pihlatie, M., Vesala, T., Pumpanen, J., 2014. Changes in biogeochemistry and carbon fluxes in a boreal forest after the clear-cutting and partial burning of slash. Agric. For. Meteorol. 188, 33–44.
Laclau, J.-P., Levillain, J., Deleporte, P., de Dieu Nzila, J., Bouillet, J.-P., Saint André, L., Versini, A., Mareschal, L., Nouvellon, Y., M'Bou, A.T., 2010. Organic residue mass at planting is an excellent predictor of tree growth in Eucalyptus plantations established on a sandy tropical soil. For. Ecol. Manage. 260, 2148–2159.
Laclau, J.-P., Nouvellon, Y., Reine, C., de Moraes Gonçalves, J.L., Krushe, A.V., Jourdan, C., Le Maire, G., Bouillet, J.-P., 2013. Mixing Eucalyptus and Acacia trees leads to fine root over-yielding and vertical segregation between species. Oecologia 172, 903–913.
Laganiere, J., Angers, D.A., Pare, D., 2010. Carbon accumulation in agricultural soils after afforestation: a meta-analysis. Glob. Change Biol. 16, 439–453.
Laganière, J., Boča, A., Van Miegroet, H., Paré, D., 2017a. A tree species effect on soil that is consistent across the species' range: The case of aspen and soil carbon in north America. Forests 8, 113.
Laganière, J., Paré, D., Thiffault, E., Bernier, P.Y., 2017b. Range and uncertainties in estimating delays in greenhouse gas mitigation potential of forest bioenergy sourced from Canadian forests. GCB Bioenergy 9, 358–369.
Lajtha, K., Townsend, K.L., Kramer, M.G., Swanston, C., Bowden, R.D., Nadelhoffer, K., 2014. Changes to particulate versus mineral-associated soil carbon after 50 years of litter manipulation in forest and prairie experimental ecosystems. Biogeochemistry 119, 341–360.
Lal, R., 2004. Soil carbon sequestration impacts on global climate change and food security. Science 304, 1623–1627.
Lambers, H., Nascimento, D.L., Oliveira, R.S., Shi, J., 2019. In: Proceedings of the National Academy of Sciences, pp. 11575–11576.
Landry, J.-S., Matthews, H.D., 2016. Non-deforestation fire vs. fossil fuel combustion: the source of CO 2 emissions affects the global carbon cycle and climate responses. Biogeosciences 13, 2137.
Langner, A., Siegert, F., 2009. Spatiotemporal fire occurrence in Borneo over a period of 10 years. Glob. Change Biol. 15, 48–62.
Larney, F.J., Angers, D.A., 2012. The role of organic amendments in soil reclamation: a review. Can. J. Soil Sci. 92, 19–38.
Law, B., Waring, R., 2015. Carbon implications of current and future effects of drought, fire and management on Pacific Northwest forests. For. Ecol. Manage. 355, 4–14.
Le Page, Y., Morton, D., Hartin, C., Bond-Lamberty, B., Pereira, J.M.C., Hurtt, G., Asrar, G., 2017. Synergy between land use and climate change increases future fire risk in Amazon forests. Earth Syst. Dyn. 8, 1237.
Lehmann, J., Kleber, M., 2015. The contentious nature of soil organic matter. Nature 528, 60.
Lehmann, J., Skjemstad, J., Sohi, S., Carter, J., Barson, M., Falloon, P., Coleman, K., Woodbury, P., Krull, E., 2008. Australian climate–carbon cycle feedback reduced by soil black carbon. Nat. Geosci. 1, 832.
Leuschner, C., Wulf, M., Bäuchler, P., Hertel, D., 2014. Forest continuity as a key determinant of soil carbon and nutrient storage in beech forests on sandy soils in Northern Germany. Ecosystems 17, 497–511.
Levy, P.E., Burden, A., Cooper, M.D., Dinsmore, K.J., Drewer, J., Evans, C., Fowler, D., Gaiawyn, J., Gray, A., Jones, S.K., 2012. Methane emissions from soils: synthesis and analysis of a large UK data set. Glob. Change Biol. 18, 1657–1669.
Li, D., Niu, S., Luo, Y., 2012. Global patterns of the dynamics of soil carbon and nitrogen stocks following afforestation: a meta-analysis. New Phytol. 195, 172–181.
Li, P., Yang, Y., Han, W., Fang, J., 2014. Global patterns of soil microbial nitrogen and phosphorus stoichiometry in forest ecosystems. Glob. Ecol. Biogeogr. 23, 979–987.
Liang, C., Balser, T.C., 2011. Microbial production of recalcitrant organic matter in global soils: implications for productivity and climate policy. Nat. Rev. Microbiol. 9, 75.
Liao, W., Menge, D.N., Lichstein, J.W., Ángeles-Pérez, G., 2017. Global climate change will increase the abundance of symbiotic nitrogen-fixing trees in much of North America. Glob. Change Biol. 23, 4777–4787.
Lindner, M., Garcia-Gonzalo, J., Kolström, M., Green, T., Reguera, R., Maroschek, M., Seidl, R., Lexer, M.J., Netherer, S., Schopf, A., 2008. Impacts of climate change on European forests and options for adaptation. Report to the European Commission Directorate-General. for Agriculture and Rural Development.
Liu, Y., Prestemon, J.P., Goodrick, S.L., Holmes, T.P., Stanturf, J.A., Vose, J.M., Sun, G., 2013. Future wildfire trends, impacts, and mitigation options in the southern United States. A guide for natural resource managers in southern forest ecosystems, Climate change adaptation and mitigation management options, pp. 85–126.
Liu, Y., Stanturf, J., Goodrick, S., 2010. Trends in global wildfire potential in a changing climate. For. Ecol. Manage. 259, 685–697.
Lloret, F., Calvo, E., Pons, X., Díaz-Delgado, R., 2002. Wildfires and landscape patterns in the Eastern Iberian Peninsula. Landscape Ecol. 17, 745–759.
Löf, M., Dey, D.C., Navarro, R.M., Jacobs, D.F., 2012. Mechanical site preparation for forest restoration. New Forest. 43, 825–848.
Lovett, G.M., Arthur, M.A., Weathers, K.C., Fitzhugh, R.D., Templer, P.H., 2013. Nitrogen addition increases carbon storage in soils, but not in trees, in an eastern US deciduous forest. Ecosystems 16, 980–1001.
Luo, R., Hui, D., Miao, N., Liang, C., Wells, N., 2017. Global relationship of fire occurrence and fire intensity: A test of intermediate fire occurrence-intensity hypothesis. J. Geophys. Res. Biogeosci. 122, 1123–1136.
Luyssaert, S., Schulze, E.-D., Börner, A., Knohl, A., Hessenmöller, D., Law, B.E., Ciais, P., Grace, J., 2008. Old-growth forests as global carbon sinks. Nature 455, 213.
Ma, Z., Chen, H.Y., 2017. Effects of species diversity on fine root productivity increase with stand development and associated mechanisms in a boreal forest. J. Ecol. 105, 237–245.
Maes, S.L., Blondeel, H., Perring, M.P., Depauw, L., Brūmelis, G., Brunet, J., Decocq, G., den Ouden, J., Härdtle, W., Hédl, R., 2019. Litter quality, land-use history, and nitrogen deposition effects on topsoil conditions across European temperate deciduous forests. For. Ecol. Manage. 433, 405–418.
Maillard, É., Paré, D., Munson, A.D., 2010. Soil carbon stocks and carbon stability in a twenty-year-old temperate plantation. Soil Sci. Soc. Am. J. 74, 1775–1785.
Mäkipää, R., 1995. Effect of nitrogen input on carbon accumulation of boreal forest soils and ground vegetation. For. Ecol. Manage. 79, 217–226.
Mälkönen, E., Kukkola, M., 1991. Effect of long-term fertilization on the biomass production and nutrient status of Scots pine stands. Fertilizer Research 27, 113–127.
Mallik, A., Hu, D., 1997. Soil respiration following site preparation treatments in boreal mixedwood forest. For. Ecol. Manage. 97, 265–275.
Maquère, V., Laclau, J.-P., Bernoux, M., Saint-Andre, L., Gonçalves, J.L.D.M., Cerri, C.C., Piccolo, M.D.C., Ranger, J., 2008. Influence of land use (savanna, pasture, Eucalyptus plantations) on soil carbon and nitrogen stocks in Brazil. Eur. J. Soil Sci. 59, 863–877.
Mason, W.L., Nicol, B.C., Perks, M.P., 2009. Mitigation potential of sustainably managed forest. In Combating climate change – a role for UK forests. In: Read, D.J., Freer-Smith, P.H., Morison, J.I.L., Hanley, N., West, C.C., Snowdon, P. (Eds.), An assessment of the potential of the UK's trees and woodlands to mitigate and adapt to climate change. The synthesis report. The. Stationery Office.
Massman, W.J., Frank, J.M., Mooney, S.J., 2010. Advancing investigation and physical modeling of first-order fire effects on soils. Fire Ecology 6, 36.
Mattson, K.G., Smith, H.C., 1993. Detrital organic matter and soil CO2 efflux in forests regenerating from cutting in West Virginia. Soil Biol. Biochem. 25, 1241–1248.
Mayer, M., Keßler, D., Katzensteiner, K., 2019. Herbivory modulates soil CO2 fluxes after windthrow: a case study in temperate mountain forests. Eur. J. Forest Res.
Mayer, M., Matthews, B., Rosinger, C., Sandén, H., Godbold, D.L., Katzensteiner, K., 2017a. Tree regeneration retards decomposition in a temperate mountain soil after forest gap disturbance. Soil Biol. Biochem. 115, 490–498.
Mayer, M., Sandén, H., Rewald, B., Godbold, D.L., Katzensteiner, K., 2017b. Increase in heterotrophic soil respiration by temperature drives decline in soil organic carbon stocks after forest windthrow in a mountainous ecosystem. Funct. Ecol. 31, 1163–1172.
McSherry, M.E., Ritchie, M.E., 2013. Effects of grazing on grassland soil carbon: a global review. Glob. Change Biol. 19, 1347–1357.
Meigs, G.W., Donato, D.C., Campbell, J.L., Martin, J.G., Law, B.E., 2009. Forest fire impacts on carbon uptake, storage, and emission: the role of burn severity in the Eastern Cascades, Oregon. Ecosystems 12, 1246–1267.
Mekuria, W., Veldkamp, E., Corre, M., Haile, M., 2011. Restoration of Ecosystem Carbon Stocks Following Exclosure Establishment in Communal Grazing Lands in Tigray, Ethiopia. Soil Sci. Soc. Am. J. 75, 246–256.
Melin, Y., Petersson, H., Egnell, G., 2010. Assessing carbon balance trade-offs between bioenergy and carbon sequestration of stumps at varying time scales and harvest intensities. For. Ecol. Manage. 260, 536–542.
Menge, D.N., Batterman, S.A., Hedin, L.O., Liao, W., Pacala, S.W., Taylor, B.N., 2017. Why are nitrogen-fixing trees rare at higher compared to lower latitudes? Ecology 98, 3127–3140.
Metcalfe, D.B., Asner, G.P., Martin, R.E., Silva Espejo, J.E., Huaraca Huasco, W., Farfán Amézquita, F.F., Carranza-Jimenez, L., Galiano Cabrera, D.F., Durand Baca, L., Sinca, F., Huaraca Quispe, L.P., Alzamora Taype, I., Eguiluz Mora, L., Rozas Dávila, A., Mamani Solórzano, M., Puma Vilca, B.L., Laupa Román, J.M., Guerra Bustios, P.C., Salinas Revilla, N., Tupayachi, R., Girardin, C.A.J., Doughty, C.E., Malhi, Y., Putten, W., 2014. Herbivory makes major contributions to ecosystem carbon and nutrient cycling in tropical forests. Ecol. Lett. 17, 324–332.
MFSC, 2013. 2013: Persistence and Change – Review of 30 years of community forestry in Nepal. Ministry of Forests and Soil Conservation, Government of Nepal, Kathmandu, Nepal.
Milchunas, D.G., Lauenroth, W.K., 1993. Quantitative Effects of Grazing on Vegetation and Soils Over a Global Range of Environments. Ecol. Monogr. 63, 327–366.
Milner, J.M., Bonenfant, C., Mysterud, A., Gaillard, J.-M., Csanyi, S., Stenseth, N.C., 2006. Temporal and spatial development of red deer harvesting in Europe: biological and cultural factors. J. Appl. Ecol. 43, 721–734.
Miltner, A., Bombach, P., Schmidt-Brücken, B., Kästner, M., 2012. SOM genesis: microbial biomass as a significant source. Biogeochemistry 111, 41–55.
Miltner, A., Kindler, R., Knicker, H., Richnow, H.-H., Kästner, M., 2009. Fate of microbial biomass-derived amino acids in soil and their contribution to soil organic matter. Org Geochem. 40, 978–985.
Mjöfors, K., Strömgren, M., Nohrstedt, H.-Ö., Johansson, M.-B., Gärdenäs, A.I., 2017. Indications that site preparation increases forest ecosystem carbon stocks in the long term. Scand. J. For. Res. 32, 717–725.
Mobley, M.L., Lajtha, K., Kramer, M.G., Bacon, A.R., Heine, P.R., Richter, D.D., 2015. Surficial gains and subsoil losses of soil carbon and nitrogen during secondary forest development. Glob. Change Biol. 21, 986–996.
Moffat, A.J., Nisbet, T.R., Nicoll, B., 2011. Environmental Effects of Stump and Root Ha rvesting. Forestry Commission, In, Forest Commission Research Note.

Mohr, D., Cohnstaedt, L.W., Topp, W., 2005. Wild boar and red deer affect soil nutrients and soil biota in steep oak stands of the Eifel. Soil Biol. Biochem. 37, 693–700.
Moore, B., Kaur, G., Motavalli, P., Zurweller, B., Svoma, B., 2018. Soil greenhouse gas emissions from agroforestry and other land uses under different moisture regimes in lower Missouri River Floodplain soils: a laboratory approach. Agrofor. Syst. 92, 335–348.
Morehouse, K., Johns, T., Kaye, J., Kaye, M., 2008. Carbon and nitrogen cycling immediately following bark beetle outbreaks in southwestern ponderosa pine forests. For. Ecol. Manage. 255, 2698–2708.
Moreno-Fernández, D., Díaz-Pinés, E., Barbeito, I., Sánchez-González, M., Montes, F., Rubio, A., Cañellas, I., 2015. Temporal carbon dynamics over the rotation period of two alternative management systems in Mediterranean mountain Scots pine forests. For. Ecol. Manage. 348, 186–195.
Morison, J., Matthews, R., Miller, G., Perks, M., Randle, T., Vanguelova, E., White, M., Yamulki, S., 2012. Understanding the carbon and greenhouse gas balance of forests in Britain. In: Commission, F. (Ed.), Forest Research report. Edinburgh, United Kingdom, pp. 149.
Morris, D.M., Hazlett, P.W., Fleming, R.L., Kwiaton, M.M., Hawdon, L.A., Leblanc, J.-D., Primavera, M., Weldon, T.P., 2019. Effects of Biomass Removal Levels on Soil Carbon and Nutrient Reserves in Conifer-Dominated, Coarse-Textured Sites in Northern Ontario: 20-Year Results. Soil Sci. Soc. Am. J.
Mushinski, R.M., Gentry, T.J., Boutton, T.W., 2019. Forest organic matter removal leads to long-term reductions in bacterial and fungal abundance. Appl. Soil Ecol. 137, 106–110.
Nannipieri, P., Eldor, P., 2009. The chemical and functional characterization of soil N and its biotic components. Soil Biol. Biochem. 41, 2357–2369.
Nave, L., DeLyser, K., Butler-Leopold, P., Sprague, E., Daly, J., Swanston, C., 2019. Effects of land use and forest management on soil carbon in the ecoregions of Maryland and adjacent eastern United States. For. Ecol. Manage. 448, 34–47.
Nave, L., Swanston, C., Mishra, U., Nadelhoffer, K., 2013. Afforestation effects on soil carbon storage in the United States: a synthesis. Soil Sci. Soc. Am. J. 77, 1035–1047.
Nave, L., Vance, E., Swanston, C., Curtis, P., 2009. Impacts of elevated N inputs on north temperate forest soil C storage, C/N, and net N-mineralization. Geoderma 153, 231–240.
Nave, L.E., Vance, E.D., Swanston, C.W., Curtis, P.S., 2010. Harvest impacts on soil carbon storage in temperate forests. For. Ecol. Manage. 259, 857–866.
Nave, L.E., Vance, E.D., Swanston, C.W., Curtis, P.S., 2011. Fire effects on temperate forest soil C and N storage. Ecol. Appl. 21, 1189–1201.
Neary, D.G., Ryan, K.C., DeBano, L.F., 2005. Wildland fire in ecosystems: effects of fire on soils and water. In, Gen. Tech. Rep. RMRS-GTR-42. USDA Forest Service, Rocy Mountain Research Station, Fort Collins CO, 250.
Noh, N.J., Kim, C., Bae, S.W., Lee, W.K., Yoon, T.K., Muraoka, H., Son, Y., 2013. Carbon and nitrogen dynamics in a Pinus densiflora forest with low and high stand densities. Journal of Plant Ecology 6, 368–379.
Nohrstedt, H.Ö., 1990. Effects of repeated nitrogen fertilization with different doses on soil properties in a Pinus sylvestris stand. Scand. J. For. Res. 5, 3–15.
Nõmmik, H., 1970. Non-exchangeable binding of ammonium and amino nitrogen by Norway spruce raw humus. Plant Soil 33, 581–595.
Noormets, A., Epron, D., Domec, J.C., McNulty, S.G., Fox, T., Sun, G., King, J.S., 2015. Effects of forest management on productivity and carbon sequestration: A review and hypothesis. For. Ecol. Manage. 355, 124–140.
Noormets, A., Nouvellon, Y., 2015. Introduction for special issue: Carbon, water and nutrient cycling in managed forests. For. Ecol. Manage. 355.
Nordborg, F., Nilsson, U., Gemmel, P., Örlander, G., 2006. Carbon and nitrogen stocks in soil, trees and field vegetation in conifer plantations 10 years after deep soil cultivation and patch scarification. Scand. J. For. Res. 21, 356–363.
Norisada, M., Kojima, K., 2005. Photosynthetic characteristics of dipterocarp species planted on degraded sandy soils in southern Thailand. Photosynthetica 43, 491–499.
Nouvellon, Y., Laclau, J., Epron, D., Le Maire, G., Bonnefond, J., Gonçalves, J., Bouillet, J., 2012. Carbon allocations throughout the development of monospecific and mixed-species plantations of Eucalyptus grandis and Acacia mangium in Brazil. Tree Physiol. 32, 680–695.
Novak, J., Slodicak, M., 2004. Structure and accumulation of litterfall under Norway spruce stands in connection with thinnings. Journal of Forest Science 50, 101–108.
Ogle, S., Breidt, F., Paustian, K., 2005. Agricultural management impacts on soil organic carbon storage under moist and dry climatic conditions of temperate and tropical regions. Biogeochemistry 72, 87–121.
Ojanen, P., Minkkinen, K., Penttilä, T., 2013. The current greenhouse gas impact of forestry-drained boreal peatlands. For. Ecol. Manage. 289, 201–208.
Oliveira, F.C.C., Silva, I.R., Ferreira, G.W.D., Soares, E.M.B., Silva, S.R., Silva, E.F., 2018. Contribution of Eucalyptus Harvest Residues and Nitrogen Fertilization to Carbon Stabilization in Ultisols of. Southern Bahia. Revista Brasileira de Ciência do Solo 42.
Olsson, B.A., Staaf, H., Lundkvist, H., Bengtsson, J., Kaj, R., 1996. Carbon and nitrogen in coniferous forest soils after clear-felling and harvests of different intensity. For. Ecol. Manage. 82, 19–32.
Olsson, P., Linder, S., Giesler, R., Högberg, P., 2005. Fertilization of boreal forest reduces both autotrophic and heterotrophic soil respiration. Glob. Change Biol. 11, 1745–1753.
Örlander, G., Egnell, G., Albrektson, A., 1996. Long-term effects of site preparation on growth in Scots pine. For. Ecol. Manage. 86, 27–37.
Päivänen, J., Hånell, B., 2012. Peatland ecology and forestry: a sound approach. University of Helsinki, Department of Forest Sciences.
Pan, Y., Birdsey, R.A., Fang, J., Houghton, R., Kauppi, P.E., Kurz, W.A., Phillips, O.L., Shvidenko, A., Lewis, S.L., Canadell, J.G., Ciais, P., Jackson, R.B., Pacala, S.W., McGuire, A.D., Piao, S., Rautiainen, A., Sitch, S., Hayes, D., 2011. A Large and Persistent Carbon Sink in the World's Forests. Science 333, 988–993.
Paterson, E., Midwood, A.J., Millard, P., 2009. Through the eye of the needle: a review of isotope approaches to quantify microbial processes mediating soil carbon balance. New Phytol. 184, 19–33.
Paul, E.A., 2016. The nature and dynamics of soil organic matter: Plant inputs, microbial transformations, and organic matter stabilization. Soil Biol. Biochem. 98, 109–126.
Pausas, J.G., Fernández-Muñoz, S., 2012. Fire regime changes in the Western Mediterranean Basin: from fuel-limited to drought-driven fire regime. Clim. Change 110, 215–226.
Pellegrini, A.F., Ahlström, A., Hobbie, S.E., Reich, P.B., Nieradzik, L.P., Staver, A.C., Scharenbroch, B.C., Jumpponen, A., Anderegg, W.R., Randerson, J.T., 2018. Fire frequency drives decadal changes in soil carbon and nitrogen and ecosystem productivity. Nature 553, 194.
Perakis, S.S., Pett-Ridge, J.C., 2019. Nitrogen-fixing red alder trees tap rock-derived nutrients. Proc. Natl. Acad. Sci. 116, 5009–5014.
Pereira, A.D.A., Andrade, P.D., Bini, D., Durrer, A., Robin, A., Bouillet, J.P., Andreote, F.D., Cardoso, E.J.B.N., 2017. Shifts in the bacterial community composition along deep soil profiles in monospecific and mixed stands of Eucalyptus grandis and Acacia mangium. PLoS ONE 12 e0180371 e0180371.
Pereira, A.P., Durrer, A., Gumiere, T., Gonçalves, J.L., Robin, A., Bouillet, J.-P., Wang, J., Verma, J.P., Singh, B.K., Cardoso, E.J., 2019. Mixed Eucalyptus plantations induce changes in microbial communities and increase biological functions in the soil and litter layers. For. Ecol. Manage. 433, 332–342.
Perring, M.P., Standish, R.J., Hobbs, R.J., 2013. Incorporating novelty and novel ecosystems into restoration planning and practice in the 21st century. Ecological Processes 2, 1–8.
Persson, T., Lenoir, L., Vegerfors, B., 2017. Long-term effects of stump harvesting and site preparation on pools and fluxes of soil carbon and nitrogen in central Sweden. Scand. J. For. Res. 32, 222–229.
Phillips, R.J., Waldrop, T.A., Brose, P.H., Wang, G.G., 2012. Restoring fire-adapted forests in eastern North America for biodiversity conservation and hazardous fuels reduction. In: Stanturf, J., Madsen, P., Lamb, D. (Eds.), A Goal-Oriented Approach to Forest Landscape Restoration. Springer, Dordrecht, pp. 187–219.
Piirainen, S., Finer, L., Starr, M., 2015. Changes in forest floor and mineral soil carbon andnitrogen stocks in a boreal forest after clear-cutting andmechanical site preparation. Eur. J. Soil Sci. 66, 735–743.
Pingree, M.R., Kobziar, L.N., 2019. The myth of the biological threshold: a review of biological responses to soil heating associated with wildland fire. For. Ecol. Manage. 432, 1022–1029.
Pitkänen, A., Turunen, J., Tahvanainen, T., Simola, H., 2013. Carbon storage change in a partially forestry-drained boreal mire determined through peat column inventories.
Poeplau, C., Don, A., 2013. Sensitivity of soil organic carbon stocks and fractions to different land-use changes across Europe. Geoderma 192, 189–201.
Poeplau, C., Don, A., Vesterdal, L., Leifeld, J., Van Wesemael, B., Schumacher, J., Gensior, A., 2011. Temporal dynamics of soil organic carbon after land-use change in the temperate zone–carbon response functions as a model approach. Glob. Change Biol. 17, 2415–2427.
Pötzelsberger, E., Hasenauer, H., 2015. Soil change after 50 years of converting Norway spruce dominated age class forests into single tree selection forests. For. Ecol. Manage. 338, 176–182.
Powers, M., Kolka, R., Palik, B., McDonald, R., Jurgensen, M., 2011. Long-term management impacts on carbon storage in Lake States forests. For. Ecol. Manage. 262, 424–431.
Powers, M.D., Kolka, R.K., Bradford, J.B., Palik, B.J., Fraver, S., Jurgensen, M.F., 2012. Carbon stocks across a chronosequence of thinned and unmanaged red pine (Pinus resinosa) stands. Ecol. Appl. 22, 1297–1307.
Powlson, D., Stirling, C., Jat, M., Gerard, B., Palm, C., Sanchez, P., Cassman, K., 2014. Limited potential of no-till agriculture for climate change mitigation. Nat. Clim. Change 4, 678–683.
Pregitzer, K.S., Burton, A.J., Zak, D.R., Talhelm, A.F., 2008. Simulated chronic nitrogen deposition increases carbon storage in Northern Temperate forests. Glob. Change Biol. 14, 142–153.
Prescott, C.E., 1997. Effects of clearcutting and alternative silvicultural systems on rates of decomposition and nitrogen mineralization in a coastal montane coniferous forest. For. Ecol. Manage. 95, 253–260.
Prescott, C.E., Blevins, L.L., Staley, C.L., 2000a. Effects of clear-cutting on decomposition rates of litter and forest floor in forests of British Columbia. Can. J. For. Res. 30, 1751–1757.
Prescott, C.E., Reid, A., Wu, S.Y., Nilsson, M.-C., 2017. Decomposition rates of surface and buried forest-floor material. Can. J. For. Res. 47, 1140–1144.
Prescott, C.E., Zabek, L.M., Staley, C.L., Kabzems, R., 2000b. Decomposition of broadleaf and needle litter in forests of British Columbia: influences of litter type, forest type, and litter mixtures. Can. J. For. Res. 30, 1742–1750.
Pretzsch, H., 2014. Canopy space filling and tree crown morphology in mixed-species stands compared with monocultures. For. Ecol. Manage. 327, 251–264.
Prietzel, J., Ammer, C., 2008. Montane Bermischwälder der Bayerischen Kalkalpen: Reduktion der Schalenwilddichte steigert nicht nur den Verjüngungserfolg, sondern auch die Bodenfruchtbarkeit. Allgemeine Forst- und Jagdzeitung 179, 104–112.
Prietzel, J., Rehfuess, K.E., Stetter, U., Pretzsch, H., 2008. Changes of soil chemistry, stand nutrition, and stand growth at two Scots pine (Pinus sylvestris L.) sites in Central Europe during 40 years after fertilization, liming, and lupine introduction. Eur. J. Forest Res. 127, 43–61.
Pröll, G., Darabant, A., Gratzer, G., Katzensteiner, K., 2014. Unfavourable microsites, competing vegetation and browsing restrict post-disturbance tree regeneration on extreme sites in the Northern Calcareous Alps. Eur. J. Forest Res. 134, 293–308.
Puhlick, J.J., Fernandez, I.J., Weiskittel, A.R., 2016. Evaluation of forest management effects on the mineral soil carbon pool of a lowland, mixed-species forest in Maine,

USA. Can. J. Soil Sci. 96, 207–218.
Pumpanen, J., Westman, C.J., Iivesniemi, H., 2004. Soil CO2 efflux from a podzolic forest soil before and after forest clear-cutting and site preparation. Boreal Environ. Res. 9, 199–212.
Quigley, M.Y., Negassa, W.C., Guber, A.K., Rivers, M.L., Kravchenko, A.N., 2018. Influence of pore characteristics on the fate and distribution of newly added carbon. Frontiers in Environmental. Science 6.
Rabin, S.S., Melton, J.R., Lasslop, G., Bachelet, D., Forrest, M., Hantson, S., Li, F., Mangeon, S., Yue, C., Arora, V.K., 2017. The Fire Modeling Intercomparison Project (FireMIP), phase 1: Experimental and analytical protocols. Geosci. Model Dev. 20, 1175–1197.
Rachid, C., Balieiro, F., Peixoto, R., Pinheiro, Y., Piccolo, M., Chaer, G., Rosado, A., 2013. Mixed plantations can promote microbial integration and soil nitrate increases with changes in the N cycling genes. Soil Biol. Biochem. 66, 146–153.
Radeloff, V.C., Williams, J.W., Bateman, B.L., Burke, K.D., Carter, S.K., Childress, E.S., Cromwell, K.J., Gratton, C., Hasley, A.O., Kraemer, B.M., 2015. The rise of novelty in ecosystems. Ecol. Appl. 25, 2051–2068.
Rahman, M.M., Bárcena, T.G., Vesterdal, L., 2017. Tree species and time since afforestation drive soil C and N mineralization on former cropland. Geoderma 305, 153–161.
Ramirez, J.I., Jansen, P.A., den Ouden, J., Goudzwaard, L., Poorter, L., 2019. Long-term effects of wild ungulates on the structure, composition and succession of temperate forests. For. Ecol. Manage. 432, 478–488.
Ramirez, J.I., Jansen, P.A., Poorter, L., 2018. Effects of wild ungulates on the regeneration, structure and functioning of temperate forests: A semi-quantitative review. For. Ecol. Manage. 424, 406–419.
Ramirez, K.S., Craine, J.M., Fierer, N., 2012. Consistent effects of nitrogen amendments on soil microbial communities and processes across biomes. Glob. Change Biol. 18, 1918–1927.
Rashid, A., Ahmed, T., Ayub, N., Khan, A., 1997. Effect of forest fire on number, viability and post-fire re-establishment of arbuscular mycorrhizae. Mycorrhiza 7, 217–220.
Rasmussen, C., Heckman, K., Wieder, W.R., Keiluweit, M., Lawrence, C.R., Berhe, A.A., Blankinship, J.C., Crow, S.E., Druhan, J.L., Pries, C.E.H., 2018. Beyond clay: towards an improved set of variables for predicting soil organic matter content. Biogeochemistry 137, 297–306.
Ratcliffe, S., Wirth, C., Jucker, T., van der Plas, F., Scherer-Lorenzen, M., Verheyen, K., Allan, E., Benavides, R., Bruelheide, H., Ohse, B., 2017. Biodiversity and ecosystem functioning relations in European forests depend on environmental context. Ecol. Lett. 20, 1414–1426.
Ražauskaitė, R., 2019. Soil organic carbon changes in the UK forest soils. In. University of Aberdeen.
Reichstein, M., Ågren, G.I., Fontaine, S., 2009. Is there a theoretical limit to soil carbon storage in old-growth forests? A model analysis with contrasting approaches. In, Old-Growth Forests. Springer, pp. 267–281.
Reimoser, F., Reimoser, S., 2010. Ungulates and their management in Austria. In: Apollonio, M., Andersen, A., Putman, P. (Eds.), European Ungulates and their Management in the 21th Century. Cambridge University Press, pp. 338–356.
Rein, G., Cleaver, N., Ashton, C., Pironi, P., Torero, J.L., 2008. The severity of smouldering peat fires and damage to the forest soil. Catena 74, 304–309.
Relva, M.A., Castán, E., Mazzarino, M.J., 2014. Litter and soil properties are not altered by invasive deer browsing in forests of NW Patagonia. Acta Oecologica 54, 45–50.
Resh, S.C., Binkley, D., Parrotta, J.A., 2002. Greater soil carbon sequestration under nitrogen-fixing trees compared with Eucalyptus species. Ecosystems 5, 217–231.
Reynolds, B., 2007. Implications of changing from grazed or semi-natural vegetation to forestry for carbon stores and fluxes in upland organo-mineral soils in the UK. Hydrol. Earth Syst. Sci. 11, 61–76.
Ribbons, R.R., Kepfer-Rojas, S., Kosawang, C., Hansen, O.K., Ambus, P., McDonald, M., Grayston, S.J., Prescott, C.E., Vesterdal, L., 2018. Context-dependent tree species effects on soil nitrogen transformations and related microbial functional genes. Biogeochemistry 140, 145–160.
Richardson, D.M., Carruthers, J., Hui, C., Impson, F.A., Miller, J.T., Robertson, M.P., Rouget, M., Le Roux, J.J., Wilson, J.R., 2011. Human-mediated introductions of Australian acacias–a global experiment in biogeography. Divers. Distrib. 17, 771–787.
Roberts, S.D., Harrington, C.A., Terry, T.A., 2005. Harvest residue and competing vegetation affect soil moisture, soil temperature, N availability, and Douglas-fir seedling growth. For. Ecol. Manage. 205, 333–350.
Rocha, J.H.T., de Moraes Gonçalves, J.L., Brandani, C.B., de Vicente Ferraz, A., Franci, A.F., Marques, E.R.G., Junior, J.C.A., Hubner, A., 2018. Forest residue removal decreases soil quality and affects wood productivity even with high rates of fertilizer application. For. Ecol. Manage. 430, 188–195.
Romps, D.M., Seeley, J.T., Vollaro, D., Molinari, J., 2014. Projected increase in lightning strikes in the United States due to global warming. Science 346, 851–854.
Rooney, T.P., 2001. Deer impacts on forest ecosystems: a North American perspective. Forestry: An International Journal of Forest Research 74, 201–208.
Root-Bernstein, M., Valenzuela, R., Huerta, M., Armesto, J., Jaksic, F., 2017. Acacia caven nurses endemic sclerophyllous trees along a successional pathway from silvopastoral savanna to forest. Ecosphere 8, e01667.
Ruamps, L.S., Nunan, N., Chenu, C., 2011. Microbial biogeography at the soil pore scale. Soil Biol. Biochem. 43, 280–286.
Ruiz-Peinado, R., Bravo-Oviedo, A., López-Senespleda, E., Montero, G., Río, M., 2013. Do thinnings influence biomass and soil carbon stocks in Mediterranean maritime pinewoods? Eur. J. Forest Res. 132, 253–262.
Russell, A.E., Raich, J.W., Valverde-Barrantes, O.J., Fisher, R.F., 2007. Tree species effects on soil properties in experimental plantations in tropical moist forest. Soil Sci. Soc. Am. J. 71, 1389–1397.
Scharlemann, J.P.W., Tanner, E.V.J., Hiederer, R., Kapos, V., 2014. Global soil carbon: understanding and managing the largest terrestrial carbon pool. Carbon Manage. 5, 81–91.
Schelfhout, S., Mertens, J., Verheyen, K., Vesterdal, L., Baeten, L., Muys, B., De Schrijver, A., 2017. Tree species identity shapes earthworm communities. Forests 8, 85.
Schelhaas, M.-J., Hengeveld, G., Moriondo, M., Reinds, G.J., Kundzewicz, Z.W., Ter Maat, H., Bindi, M., 2010. Assessing risk and adaptation options to fires and windstorms in European forestry. Mitig. Adapt. Strat. Glob. Change 15, 681–701.
Schleuß, P.-M., Heitkamp, F., Leuschner, C., Fender, A.-C., Jungkunst, H.F., 2014. Higher subsoil carbon storage in species-rich than species-poor temperate forests. Environ. Res. Lett. 9, 014007.
Schmidt, M.G., Macdonald, S.E., Rothwell, R.L., 1996. Impacts of harvesting and mechanical site preparation on soil chemical properties of mixed-wood boreal forest sites in Alberta. Can. J. Soil Sci. 76, 531–540.
Schmidt, M.W.I., Torn, M.S., Abiven, S., Dittmar, T., Guggenberger, G., Janssens, I.A., Kleber, M., Kogel-Knabner, I., Lehmann, J., Manning, D.A.C., Nannipieri, P., Rasse, D.P., Weiner, S., Trumbore, S.E., 2011. Persistence of soil organic matter as an ecosystem property. Nature 478, 49–56.
Schoennagel, T., Balch, J.K., Brenkert-Smith, H., Dennison, P.E., Harvey, B.J., Krawchuk, M.A., Mietkiewicz, N., Morgan, P., Moritz, M.A., Rasker, R., 2017. Adapt to more wildfire in western North American forests as climate changes. Proc. Natl. Acad. Sci. 114, 4582–4590.
Schulp, C., Verburg, P., 2009. Effect of land use history and site factors on spatial variation of soil organic carbon across a physiographic region. Agric. Ecosyst. Environ. 133, 86–97.
Schulz, K., Voigt, K., Beusch, C., Almeida-Cortez, J.S., Kowarik, I., Walz, A., Cierjacks, A., 2016. Grazing deteriorates the soil carbon stocks of Caatinga forest ecosystems in Brazil. For. Ecol. Manage. 367, 62–70.
Schwilk, D.W., Keeley, J.E., Knapp, E.E., McIver, J., Bailey, J.D., Fettig, C.J., Fiedler, C.E., Harrod, R.J., Moghaddas, J.J., Outcalt, K.W., 2009. The national Fire and Fire Surrogate study: effects of fuel reduction methods on forest vegetation structure and fuels. Ecol. Appl. 19, 285–304.
Seidl, R., Thom, D., Kautz, M., Martin-Benito, D., Peltoniemi, M., Vacchiano, G., Wild, J., Ascoli, D., Petr, M., Honkaniemi, J., 2017. Forest disturbances under climate change. Nat. Clim. Change 7, 395–402.
Semmartin, M., Di Bella, C., de Salamone, I.G., 2010. Grazing-induced changes in plant species composition affect plant and soil properties of grassland mesocosms. Plant Soil 328, 471–481.
Senez-Gagnon, F., Thiffault, E., Paré, D., Achim, A., Bergeron, Y., 2018. Dynamics of detrital carbon pools following harvesting of a humid eastern Canadian balsam fir boreal forest. For. Ecol. Manage. 430, 33–42.
Sferlazza, S., Maetzke, F., Iovino, M., Baiamonte, G., Palmeri, V., Veca, D., 2018. Effects of traditional forest management on carbon storage in a Mediterranean holm oak (Quercus ilex L.) coppice. Iforest-Biogeosciences and Forestry 11, 344–351.
Shi, S., Zhang, W., Zhang, P., Yu, Y., Ding, F., 2013. A synthesis of change in deep soil organic carbon stores with afforestation of agricultural soils. For. Ecol. Manage. 296, 53–63.
Shrestha, B., Singh, B., 2008. Soil and vegetation carbon pools in a mountainous watershed of Nepal. Nutr. Cycl. Agroecosyst. 81, 179–191.
Silva Pedro, M., Rammer, W., Seidl, R., 2015. Tree species diversity mitigates disturbance impacts on the forest carbon cycle. Oecologia 177, 619–630.
Silver, W., Ostertag, R., Lugo, A., 2000. The potential for carbon sequestration through reforestation of abandoned tropical agricultural and pasture lands. Restor. Ecol. 8, 394–407.
Simard, D., Fyles, J., Paré, D., Nguyen, T., 2001. Impacts of clearcut harvesting and wildfire on soil nutrient status in the Quebec boreal forest. Can. J. Soil Sci. 81, 229–237.
Simola, H., Pitkänen, A., Turunen, J., 2012. Carbon loss in drained forestry peatlands in Finland, estimated by re-sampling peatlands surveyed in the 1980s. Eur. J. Soil Sci. 63, 798–807.
Simpson, A.J., Simpson, M.J., Smith, E., Kelleher, B.P., 2007. Microbially derived inputs to soil organic matter: are current estimates too low? Environ. Sci. Technol. 41, 8070–8076.
Six, J., Conant, R.T., Paul, E.A., Paustian, K., 2002. Stabilization mechanisms of soil organic matter: Implications for C-saturation of soils. Plant Soil 241, 155–176.
Six, J., Frey, S., Thiet, R., Batten, K., 2006. Bacterial and fungal contributions to carbon sequestration in agroecosystems. Soil Sci. Soc. Am. J. 70, 555–569.
Skovsgaard, J.P., Stupak, I., Vesterdal, L., 2006. Distribution of biomass and carbon in even-aged stands of Norway spruce (Picea abies (L.) Karst.): A case study on spacing and thinning effects in northern Denmark. Scand. J. For. Res. 21, 470–488.
Smethurst, P.J., 2010. Forest fertilization: trends in knowledge and practice compared to agriculture. Plant Soil 335, 83–100.
Soares, E., Ferreira, G.W., Oliveira, F.C., Teixeira, R.S., Silva, I., 2019. The Influence of the Rotation Length of Eucalypt Plantations on Soil Organic Matter Dynamics in Southern Brazil. Soil Sci. Soc. Am. J. 83, 1799–1808.
Soimakallio, S., Saikku, L., Valsta, L., Pingoud, K., 2016. Climate Change Mitigation Challenge for Wood Utilization The Case of Finland. Environ. Sci. Technol. 50, 5127–5134.
Sollins, P., Homann, P., Caldwell, B.A., 1996. Stabilization and destabilization of soil organic matter: mechanisms and controls. Geoderma 74, 65–105.
Sollins, P., Swanston, C., Kleber, M., Filley, T., Kramer, M., Crow, S., Caldwell, B.A., Lajtha, K., Bowden, R., 2006. Organic C and N stabilization in a forest soil: Evidence from sequential density fractionation. Soil Biol. Biochem. 38, 3313–3324.
Soucémarianadin, L.N., Cécillon, L., Guenet, B., Chenu, C., Baudin, F., Nicolas, M., Girardin, C., Barré, P., 2018. Environmental factors controlling soil organic carbon stability in French forest soils. Plant Soil 426, 267–286.

Spessa, A., van der Werf, G., Thonicke, K., Gomez Dans, J., Lehsten, V., Fisher, R., Forrest, M., 2013. Modeling vegetation fires and fire emissions. In: Goldammer, J.G. (Ed.), Vegetation Fires and Global Change – Challenges for Concerted International Action-A White Paper directed to the United Nations and International Organizations. Kessel Publishing House, Global Fire Monitoring Center.
Stark, S., Wardle, D.A., Ohtonen, R., Helle, T., Yeates, G.W., 2000. The effect of reindeer grazing on decomposition, mineralization and soil biota in a dry oligotrophic Scots pine forest. Oikos 90, 301–310.
Steidinger, B.S., Crowther, T.W., Liang, J., Van Nuland, M.E., Werner, G.D., Reich, P.B., Nabuurs, G., De-Miguel, S., Zhou, M., Picard, N., 2019. Climatic controls of decomposition drive the global biogeography of forest-tree symbioses. Nature 569, 404.
Stephens, S.L., Burrows, N., Buyantuyev, A., Gray, R.W., Keane, R.E., Kubian, R., Liu, S., Seijo, F., Shu, L., Tolhurst, K.G., 2014. Temperate and boreal forest mega-fires: characteristics and challenges. Front. Ecol. Environ. 12, 115–122.
Stritar, M.L., Schweitzer, J.A., Hart, S.C., Bailey, J.K., 2010. Introduced ungulate herbivore alters soil processes after fire. Biol. Invasions 12, 313–324.
Strömgren, M., Egnell, G., Olsson, B.A., 2013. Carbon stocks in four forest stands in Sweden 25 years after harvesting of slash and stumps. For. Ecol. Manage. 290, 59–66.
Strong, T.F., 1997. Harvesting Intensity Influences the Carbon Distribution in a Northern Hardwood Ecosystem. In.
Strukelj, M., Brais, S., Paré, D., 2015. Nine-year changes in carbon dynamics following different intensities of harvesting in boreal aspen stands. Eur. J. Forest Res. 134, 737–754.
Stupak, I., Asikainen, A., Jonsell, M., Karltun, E., Lunnan, A., Mizaraitė, D., Pasanen, K., Pärn, H., Raulund-Rasmussen, K., Röser, D., 2007. Sustainable utilisation of forest biomass for energy—possibilities and problems: policy, legislation, certification, and recommendations and guidelines in the Nordic, Baltic, and other European countries. Biomass Bioenergy 31, 666–684.
Sun, O.J., Campbell, J., Law, B.E., Wolf, V., 2004. Dynamics of carbon stocks in soils and detritus across chronosequences of different forest types in the Pacific Northwest, USA. Glob. Change Biol. 10, 1470–1481.
Sun, X., Sun, H., Wang, W., Razaq, M., 2019. Effects of stand density on soil organic carbon storage in the top and deep soil layers of Fraxinus mandshurica plantations. Austrian J. For. Sci. 136, 27–44.
Swain, E.Y., Perks, M.P., Vanguelova, E.I., Abbott, G.D., 2010. Carbon stocks and phenolic distributions in peaty gley soils afforested with Sitka spruce (Picea sitchensis). Org Geochem. 41, 1022–1025.
Syphard, A.D., Brennan, T.J., Keeley, J.E., 2014. The role of defensible space for residential structure protection during wildfires. International Journal of Wildland Fire 23, 1165–1175.
Tanentzap, A.J., Coomes, D.A., 2012. Carbon storage in terrestrial ecosystems: do browsing and grazing herbivores matter? Biol. Rev. 87, 72–94.
Tang, G., Li, K., 2013. Tree species controls on soil carbon sequestration and carbon stability following 20 years of afforestation in a valley-type savanna. For. Ecol. Manage. 291, 13–19.
Tang, J., Bolstad, P.V., Martin, J.G., 2009. Soil carbon fluxes and stocks in a Great Lakes forest chronosequence. Glob. Change Biol. 15, 145–155.
Tarnocai, C., Canadell, J., Schuur, E., Kuhry, P., Mazhitova, G., Zimov, S., 2009. Soil organic carbon pools in the northern circumpolar permafrost region. Global biogeochemical cycles 23.
Taufik, M., Torfs, P.J., Uijlenhoet, R., Jones, P.D., Murdiyarso, D., Van Lanen, H.A., 2017. Amplification of wildfire area burnt by hydrological drought in the humid tropics. Nat. Clim. Change 7, 428.
Taylor, B.N., Chazdon, R.L., Bachelot, B., Menge, D.N., 2017. Nitrogen-fixing trees inhibit growth of regenerating Costa Rican rainforests. Proc. Natl. Acad. Sci. 114, 8817–8822.
Tedim, F., Leone, V., Amraoui, M., Bouillon, C., Coughlan, M.R., Delogu, G.M., Fernandes, P.M., Ferreira, C., McCaffrey, S., McGee, T.K., 2018. Defining extreme wildfire events: difficulties, challenges, and impacts. Fire 1, 9. https://doi.org/10.3390/fire1010009.
Thiffault, E., Hannam, K.D., Paré, D., Titus, B.D., Hazlett, P.W., Maynard, D.G., Brais, S., 2011. Effects of forest biomass harvesting on soil productivity in boreal and temperate forests—A review. Environmental Reviews 19, 278–309.
Thom, D., Seidl, R., 2015. Natural disturbance impacts on ecosystem services and biodiversity in temperate and boreal forests. Biol. Rev. 91, 760–781.
Tieszen, L., Tappan, G., Toure, A., 2004. Sequestration of Carbon in Soil Organic Matter in Senegal: an overview. J. Arid Environ. 59, 409–425.
Timmons, D.S., Buchholz, T., Veeneman, C.H., 2016. Forest biomass energy: Assessing atmospheric carbon impacts by discounting future carbon flows. GCB Bioenergy 8, 631–643.
Treseder, K.K., Mack, M.C., Cross, A., 2004. Relationships among fires, fungi, and soil dynamics in Alaskan boreal forests. Ecol. Appl. 14, 1826–1838.
Trettin, C., Jurgensen, M., Gale, M., McLaughlin, J., 2011. Recovery of carbon and nutrient pools in a northern forested wetland 11 years after harvesting and site preparation. For. Ecol. Manage. 262, 1826–1833.
Truax, B., Fortier, J., Gagnon, D., Lambert, F., 2018. Planting density and site effects on stem dimensions, stand productivity, biomass partitioning, carbon stocks and soil nutrient supply in hybrid poplar plantations. Forests 9, 293.
Turetsky, M.R., Benscoter, B., Page, S., Rein, G., Van Der Werf, G.R., Watts, A., 2015. Global vulnerability of peatlands to fire and carbon loss. Nat. Geosci. 8, 11.
Turner, J., Lambert, M., Turner, S., 2017. Long term carbon and nutrient dynamics within two small radiata pine catchments. For. Ecol. Manage. 389, 1–14.
UNEP, 2012. Sahel Atlas of Changing Landscapes: Tracing trends and variations in vegetation cover and soil condition. In. United Nations Environment Programme, Nairobi.
Valdés-Correcher, E., Sitters, J., Wassen, M., Brion, N., Venterink, H.O., 2019. Herbivore dung quality affects plant community diversity. Sci. Rep. 9, 5675.
Van Der Werf, G.R., Randerson, J.T., Giglio, L., Van Leeuwen, T.T., Chen, Y., Rogers, B.M., Mu, M., Van Marle, M.J., Morton, D.C., Collatz, G.J., 2017. Global fire emissions estimates during 1997–2016. Earth Syst. Sci. Data 9, 697.
Van Miegroet, H., Cole, D., 1984. The impact of nitrification on soil acidification and cation leaching in a red alder ecosystem. J. Environ. Qual. 13, 586–590.
Van Miegroet, H., Olsson, M., 2011. Ecosystem Disturbance and Soil Organic Carbon – A Review. Soil Carbon in Sensitive European Ecosystems 85–117.
Vanguelova, E., Chapman, S., Perks, M., Yamulki, S., Randle, T., Ashwood, F., Morison, J., 2018. Afforestation and restocking on peaty soils: new evidence assessment. In, Report to. CXC (ClimateXChange), Scotland.
Vanguelova, E., Crow, P., Benham, S., Pitman, R., Forster, J., Eaton, E., Morison, J., 2019. Impact of Sitka spruce (Picea sitchensis (Bong.) Carr.) afforestation on the carbon stocks of peaty gley soils–a chronosequence study in the north of England. Forestry: An International Journal of Forest Research 92, 242–252.
Vanguelova, E., Pitman, R., Luiro, J., Helmisaari, H.-S., 2010. Long term effects of whole tree harvesting on soil carbon and nutrient sustainability in the UK. Biogeochemistry 101, 43–59.
Vanguelova, E.I., Pitman, R., Benham, S., Perks, M., Morison, J.I., 2017. Impact of Tree Stump Harvesting on Soil Carbon and Nutrients and Second Rotation Tree Growth in Mid-Wales, UK. Open Journal of Forestry 7, 58–78.
Vasaitis, R., Stenlid, J., Thomsen, I.M., Barklund, P., Dahlberg, A., 2008. Stump removal to control root rot in forest stands. A literature study. Silva Fennica 42, 457.
Veraverbeke, S., Rogers, B.M., Goulden, M.L., Jandt, R.R., Miller, C.E., Wiggins, E.B., Randerson, J.T., 2017. Lightning as a major driver of recent large fire years in North American boreal forests. Nat. Clim. Change 7, 529–534.
Verheyen, K., Vanhellemont, M., Auge, H., Baeten, L., Baraloto, C., Barsoum, N., Bilodeau-Gauthier, S., Bruelheide, H., Castagneyrol, B., Godbold, D., 2016. Contributions of a global network of tree diversity experiments to sustainable forest plantations. Ambio 45, 29–41.
Versini, A., Mareschal, L., Matsoumbou, T., Zeller, B., Ranger, J., Laclau, J.-P., 2014. Effects of litter manipulation in a tropical Eucalyptus plantation on leaching of mineral nutrients, dissolved organic nitrogen and dissolved organic carbon. Geoderma 232, 426–436.
Versini, A., Nouvellon, Y., Laclau, J.-P., Kinana, A., Mareschal, L., Zeller, B., Ranger, J., Epron, D., 2013. The manipulation of organic residues affects tree growth and heterotrophic CO2 efflux in a tropical Eucalyptus plantation. For. Ecol. Manage. 301, 79–88.
Verstraeten, G., Vancampenhout, K., Desie, E., De Schrijver, A., Hlava, J., Schelfhout, S., Verheyen, K., Muys, B., 2018. Tree species effects are amplified by clay content in acidic soils. Soil Biol. Biochem. 121, 43–49.
Vesterdal, L., Clarke, N., Sigurdsson, B.D., Gundersen, P., 2013. Do tree species influence soil carbon stocks in temperate and boreal forests? For. Ecol. Manage. 309, 4–18.
Vesterdal, L., Dalsgaard, M., Felby, C., Raulund-Rasmussen, K., Jørgensen, B.B., 1995. Effects of thinning and soil properties on accumulation of carbon, nitrogen and phosphorus in the forest floor of Norway spruce stands. For. Ecol. Manage. 77, 1–10.
Vesterdal, L., Ritter, E., Gundersen, P., 2002. Change in soil organic carbon following afforestation of former arable land. For. Ecol. Manage. 169, 137–147.
Vesterdal, L., Schmidt, I.K., Callesen, I., Nilsson, L.O., Gundersen, P., 2008. Carbon and nitrogen in forest floor and mineral soil under six common European tree species. For. Ecol. Manage. 255, 35–48.
Vidal, D.F., Trichet, P., Puzos, L., Bakker, M.R., Delerue, F., Augusto, L., 2019. Intercropping N-fixing shrubs in pine plantation forestry as an ecologically sustainable management option. For. Ecol. Manage. 437, 175–187.
Vítková, M., Müllerová, J., Sádlo, J., Pergl, J., Pyšek, P., 2017. Black locust (Robinia pseudoacacia) beloved and despised: A story of an invasive tree in Central Europe. For. Ecol. Manage. 384, 287–302.
Vitousek, P.M., Walker, L.R., Whiteaker, L.D., Mueller-Dombois, D., Matson, P.A., 1987. Biological invasion by Myrica faya alters ecosystem development in Hawaii. Science 238, 802–804.
Voigtlaender, M., Brandani, C., Caldeira, D., Tardy, F., Bouillet, J.-P., Gonçalves, J.L.M., Moreira, M.Z., Leite, F.P., Brunet, D., Paula, R.R., 2019. Nitrogen cycling in monospecific and mixed-species plantations of Acacia mangium and Eucalyptus at 4 sites in Brazil. For. Ecol. Manage. 436, 56–67.
von Lützow, M., Kögel-Knabner, I., Ekschmitt, K., Matzner, E., Guggenberger, G., Marschner, B., Flessa, H., 2006. Stabilization of organic matter in temperate soils: mechanisms and their relevance under different soil conditions – a review. Eur. J. Soil Sci. 57, 426–445.
Vrignon-Brenas, S., Gay, F., Ricard, S., Snoeck, D., Perron, T., Mareschal, L., Laclau, J.-P., Gohet, É., Malagoli, P., 2019. Nutrient management of immature rubber plantations. A review. Agronomy for sustainable development 39, 11.
Walmsley, J., Godbold, D., 2010. Stump Harvesting for Bioenergy - A Review of the Environmental Impacts. Forestry 83, 17–38.
Walmsley, J., Jones, D., Reynolds, B., Price, M., Healey, J., 2009. Whole tree harvesting can reduce second rotation forest productivity. For. Ecol. Manage. 257, 1104–1111.
Wan, X., Xiao, L., Vadeboncoeur, M.A., Johnson, C.E., Huang, Z., 2018. Response of mineral soil carbon storage to harvest residue retention depends on soil texture: a meta-analysis. For. Ecol. Manage. 408, 9–15.
Wang, H., Liu, S., Wang, J., Shi, Z., Lu, L., Zeng, J., Ming, A., Tang, J., Yu, H., 2013. Effects of tree species mixture on soil organic carbon stocks and greenhouse gas fluxes in subtropical plantations in China. For. Ecol. Manage. 300, 4–13.
Wang, J.-J., Bowden, R.D., Lajtha, K., Washko, S.E., Wurzbacher, S.J., Simpson, M.J., 2019. Long-term nitrogen addition suppresses microbial degradation, enhances soil carbon storage, and alters the molecular composition of soil organic matter. Biogeochemistry 142, 299–313.
Wang, Z., Yuan, X., Wang, D., Zhang, Y., Zhong, Z., Guo, Q., Feng, C., 2018. Large

herbivores influence plant litter decomposition by altering soil properties and plant quality in a meadow steppe. Sci. Rep. 8, 9089.
Ward, C., Pothier, D., Paré, D., 2014. Do boreal forests need fire disturbance to maintain productivity? Ecosystems 17, 1053–1067.
Wardle, D.A., Bardgett, R.D., 2004. Human-induced changes in large herbivorous mammal density: the consequences for decomposers. Front. Ecol. Environ. 2, 145–153.
Wardle, D.A., Barker, G.M., Yeates, G.W., Bonner, K.I., Ghani, A., 2001. INTRODUCED BROWSING MAMMALS IN NEW ZEALAND NATURAL FORESTS: ABOVEGROUND AND BELOWGROUND CONSEQUENCES. Ecol. Monogr. 71, 587–614.
Wardle, D.A., Bonner, K.I., Barker, G.M., 2002. Linkages between plant litter decomposition, litter quality, and vegetation responses to herbivores. Funct. Ecol. 16, 585–595.
Wardle, D.A., Walker, L.R., Bardgett, R.D., 2004. Ecosystem properties and forest decline in contrasting long-term chronosequences. Science 305, 509–513.
Warren, K.L., Ashton, M.S., 2014. Change in soil and forest floor carbon after shelterwood harvests in a New England Oak-Hardwood Forest, USA. International Journal of Forestry Research 2014.
Watt, M.S., Whitehead, D., Mason, E.G., Richardson, B., Kimberley, M.O., 2003. The influence of weed competition for light and water on growth and dry matter partitioning of young Pinus radiata, at a dryland site. For. Ecol. Manage. 183, 363–376.
Wei, X., Shao, M., Gale, W., Li, L., 2014. Global pattern of soil carbon losses due to the conversion of forests to agricultural land. Sci. Rep. 4, 4062.
Wells, C., Campbell, R., DeBano, L., Lewis, C., Fredriksen, R., Franklin, E., Froehlich, R., Dunn, P., 1979. Effects of fire on soil: A state of knowledge review., National Fire Effects Workshop, Denver, Colorado, April 10 ± 14, 1978. In. General Tech. Rep. No. WO-7, USDA Forest Service.
Werth, P.A., Potter, B.E., Alexander, M.E., Clements, C.B., Cruz, M.G., Finney, M.A., Forthofer, J.M., Goodrick, S.L., Hoffman, C., Jolly, W.M., 2016. Synthesis of knowledge of extreme fire behavior: volume 2 for fire behavior specialists, researchers, and meteorologists. Gen. Tech. Rep. PNW-GTR-891. Portland, OR: US Department of Agriculture, Forest Service, Pacific Northwest Research Station. 258 p. 891.
Wiedinmyer, C., Hurteau, M.D., 2010. Prescribed Fire As a Means of Reducing Forest Carbon Emissions in the Western United States. Environ. Sci. Technol. 44, 1926–1932.
Wiesmeier, M., Prietzel, J., Barthold, F., Spörlein, P., Geuß, U., Hangen, E., Reischl, A., Schilling, B., von Lützow, M., Kögel-Knabner, I., 2013. Storage and drivers of organic carbon in forest soils of southeast Germany (Bavaria) – Implications for carbon sequestration. For. Ecol. Manage. 295, 162–172.
Wiesmeier, M., Urbanski, L., Hobley, E., Lang, B., von Luetzow, M., Marin-Spiotta, E., van Wesemael, B., Rabot, E., Liess, M., Garcia-Franco, N., 2019. Soil organic carbon storage as a key function of soils-a review of drivers and indicators at various scales. Geoderma 333, 149–162.
Williams, J.W., Jackson, S.T., 2007. Novel climates, no-analog communities, and ecological surprises. Front. Ecol. Environ. 5, 475–482.
Woomer, P., Tieszen, L., Tappan, G., Toure, A., Sall, M., 2004. Land use change and terrestrial carbon stocks in Senegal. J. Arid Environ. 59, 625–642.
Wooster, M.J., Roberts, G., Perry, G., Kaufman, Y., 2005. Retrieval of biomass combustion rates and totals from fire radiative power observations: FRP derivation and calibration relationships between biomass consumption and fire radiative energy release. Journal of Geophysical Research: Atmospheres 110.
Xu, X., Thornton, P.E., Post, W.M., 2013. A global analysis of soil microbial biomass carbon, nitrogen and phosphorus in terrestrial ecosystems. Glob. Ecol. Biogeogr. 22, 737–749.
Xue, H., Lan, X., Liang, H., Zhang, Q., 2019. Characteristics and Environmental Factors of Stoichiometric Homeostasis of Soil Microbial Biomass Carbon. Nitrogen and Phosphorus in China. Sustainability 11, 2804.
Yamulki, S., Anderson, R., Peace, A., Morison, J., 2013. Soil CO 2 CH 4 and N 2 O fluxes from an afforested lowland raised peatbog in Scotland: implications for drainage and restoration. Biogeosciences 10, 1051–1065.
Yayneshet, T., Eik, L., Moe, S., 2009. Seasonal variations in the chemical composition and dry matter degradability of exclosure forages in the semi-arid region of northern Ethiopia. Anim. Feed Sci. Technol. 148, 14–35.
Yeo, W., Fensham, R., 2014. Will Acacia secondary forest become rainforest in the Australian Wet Tropics? For. Ecol. Manage. 331, 208–217.
Yuan, G., Theng, B.K.G., 2012. Clay-organic reactions in the soil environment. In: Huang, P.M., Li, Y., Sumner, M. (Eds.), Handbook of Soil Science: Resource Management and Environmental Impacts. CRC Press, Boca Raton, pp. 2–30.
Zabowski, D., Chambreau, D., Rotramel, N., Thies, W., 2008. Long-term effects of stump removal to control root rot on forest soil bulk density, soil carbon and nitrogen content. For. Ecol. Manage. 255, 720–727.
Zak, D.R., Freedman, Z.B., Upchurch, R.A., Steffens, M., Kögel-Knabner, I., 2017. Anthropogenic N deposition increases soil organic matter accumulation without altering its biochemical composition. Glob. Change Biol. 23, 933–944.
Zang, C., Rothe, A., 2013. Effect of nutrient removal on radial growth of Pinus sylvestris and Quercus petraea in Southern Germany. Annals of forest science 70, 143–149.
Zerva, A., Mencuccini, M., 2005. Carbon stock changes in a peaty gley soil profile after afforestation with Sitka spruce (Picea sitchensis). Annals of Forest Science 62, 873–880.
Zewdie, M., 2008. Temporal Changes of Biomass Production, Soil Properties and Ground Flora in *Eucalyptus globulus* plantations in the Central Highlands of Ethiopia. In, Faculty of NAtural Resources and Agricultural Sciences. Swedish University of Agricultural Sciences, Uppsala.
Zhang, B., Zhou, X., Zhou, L., Ju, R., 2015. A global synthesis of below-ground carbon responses to biotic disturbance: a meta-analysis. Glob. Ecol. Biogeogr. 24, 126–138.
Zhang, H., Duan, H., Song, M., Guan, D., 2018a. The dynamics of carbon accumulation in Eucalyptus and Acacia plantations in the Pearl River delta region. Annals of forest science 75, 40.
Zhang, X., Guan, D., Li, W., Sun, D., Jin, C., Yuan, F., Wang, A., Wu, J., 2018b. The effects of forest thinning on soil carbon stocks and dynamics: A meta-analysis. For. Ecol. Manage. 429, 36–43.
Zhang, Y., Zhang, M., Tang, L., Che, R., Chen, H., Blumfield, T., Boyd, S., Nouansyvong, M., Xu, Z., 2018c. Long-Term Harvest Residue Retention Could Decrease Soil Bacterial Diversities Probably Due to Favouring Oligotrophic Lineages. Microb. Ecol. 76, 771–781.
Zhou, D., Zhao, S., Liu, S., Oeding, J., 2013. A meta-analysis on the impacts of partial cutting on forest structure and carbon storage. Biogeosciences 10, 3691–3703.
Zhou, G., Liu, S., Li, Z., Zhang, D., Tang, X., Zhou, C., Yan, J., Mo, J., 2006. Old-growth forests can accumulate carbon in soils. science 314 1417 1417.
Zinn, Y.L., Resck, D.V., da Silva, J.E., 2002. Soil organic carbon as affected by afforestation with Eucalyptus and Pinus in the Cerrado region of Brazil. For. Ecol. Manage. 166, 285–294.