HAL open science

An LCA framework to assess environmental efficiency of water reuse: Application to contrasted locations for wastewater reuse in agriculture

Camille Maeseele, Philippe Roux

▶ To cite this version:

Camille Maeseele, Philippe Roux. An LCA framework to assess environmental efficiency of water reuse: Application to contrasted locations for wastewater reuse in agriculture. Journal of Cleaner Production, 2021, 316, pp.128151. 10.1016/j.jclepro.2021.128151 . hal-03283811

HAL Id: hal-03283811

https://hal.inrae.fr/hal-03283811v1

Submitted on 2 Aug 2023

HAL is a multi-disciplinary open access archive for the deposit and dissemination of scientific research documents, whether they are published or not. The documents may come from teaching and research institutions in France or abroad, or from public or private research centers.

L'archive ouverte pluridisciplinaire **HAL**, est destinée au dépôt et à la diffusion de documents scientifiques de niveau recherche, publiés ou non, émanant des établissements d'enseignement et de recherche français ou étrangers, des laboratoires publics ou privés.

Distributed under a Creative Commons Attribution - NonCommercial 4.0 International License

Version of Record: https://www.sciencedirect.com/science/article/pii/S0959652621023696
Manuscript_49c3d11c686c56b672bd986a5c758e56

An LCA framework to assess environmental efficiency of water reuse: *application to contrasted locations for wastewater reuse in agriculture*

Camille Maeseele [ab], Philippe Roux [ab*]

[a] ITAP, Univ Montpellier, INRAE, Montpellier SupAgro, Montpellier, France

[b] ELSA, Research group for environmental life cycle sustainability assessment, Montpellier, France

* Corresponding author. E-mail address: philippe.roux@inrae.fr

Abstract

Wastewater reuse (WW-reuse) is an alternative water resource that may answer present and future water-scarcity issues, supplying diverse categories of water users: agricultural, industrial or even domestic. A literature review of 30 LCAs of WW-reuse case studies highlights that the majority are located in arid or semi-arid climates, with a third in coastal areas, thus illustrating the historical development of WW-reuse. However, the conclusions for these very site-specific cases (local conditions) cannot be extrapolated to all other situations where WW-reuse issues arise (continental location, temperate climate, etc.). The review also reveals that the assumptions and calculation approaches used in these case studies were not homogeneous. The aim of this study is therefore to propose a homogeneous conceptual framework for the evaluation of the environmental efficiency of WW-reuse, based on an adapted system boundary, a transparent and solid water balance as well as a comparison with a standardized reference system for water supply, applicable to all local situations. Through the application of this framework to urban WW-reuse for agricultural irrigation, various parameters are analysed to identify parameters that drive the WW-reuse eco-efficiency relative to archetypes of water supply mix (WSmix). Two wastewater regeneration treatment alternatives with contrasting energy demands are assessed in order to evaluate the range of reclaimed water quality

© 2021 published by Elsevier. This manuscript is made available under the CC BY NC user license
https://creativecommons.org/licenses/by-nc/4.0/

that might be requested by local water policies. Four main parameters are adjusted to compare the scenarios across a panel of contrasting situations: the geographical situation (coastal or continental), the level of water scarcity, the origin of the local water resource and the composition of the electricity mix. Overall results highlight situations where reclaimed water is clearly recommended from an environmental point of view (as for coastal water-scarce situations or when compared to desalinated water) and others where it is less eco-efficient than the local WSmix (energy-intensive regeneration treatment in a continental area for instance). The nutrient content of treated urban wastewater, following denitrification during wastewater treatments, is not sufficient to provide significant environmental benefits (avoided fertilizer production) to the WW-reuse scenarios. A paradigm shift in the design of wastewater treatment plants could be a source of eco-efficiency for WW-reuse, allowing for optimal recovery of the nutritional content from the wastewater.

Keywords

Life Cycle Assessment, Water Footprint, Wastewater Reuse, Water-Energy nexus, Water supply mix, Water scarcity.

Abbreviations – Glossary

CF	Characterization factor
DQI	Data quality indicator
GW	Groundwater
LCA	Life cycle assessment
LCI	Life cycle inventory
LCIA	Life cycle impact assessment
RT	Regeneration technology train
SW	Surface water
UV	Ultra-violet

WOmix	Water origin mix (as defined by Leão et al., 2018)
WSmix	Water supply mix (as defined by Leão et al., 2018)
WW-reuse	Wastewater reuse
WWTP	Waste water treatment plant

1 Introduction

In the context of climate change, the evolving state of water resources has become an issue of worldwide importance. While more than half of the world's population lives in conditions of severe physical water scarcity during at least one month per year (Mekonnen and Hoekstra, 2016), global water withdrawals have increased by a factor of six over the past 100 years (AQUASTAT, n.d.). Due to population growth, economic development and increasing urbanization, urban water supply has become particularly vulnerable. To address this issue and meet future water demands, alternative water resources must be identified and securely deployed. Wastewater reuse (WW-reuse) represents a promising response to water scarcity issues (WWAP, 2017) in various fields of application. Agriculture, for which the water supply accounts for more than 70% of the world’s water withdrawals (FAO, 2016), is the first WW-reuse market (Lautze et al., 2014). However, reclaimed water as well as artificial groundwater recharge can also supply industrial or domestic water uses (Lazarova et al., 2013). Furthermore, in agricultural irrigation, wastewater can provide nutrients for fertigation (Sala and Serra, 2004) and its nitrogen or phosphorus content largely depends on the type of wastewater treatments (Iannelli and Giraldi, 2011).

The environmental efficiency of WW-reuse largely depends on the “fit to purpose” water regeneration treatment, which is required to meet the local water quality policies of each water sector (agriculture, industry or domestic). Under certain conditions (wastewater origin, reclaimed water use, location) raw sewage even can be directly reused while in other cases advanced wastewater treatment is required. The environmental impacts of water regeneration directly depend

on the nature of the treatment technology, while the high amount of energy required for advanced or tertiary treatments (Pintilie et al., 2016) is a significant driver of indirect impacts (Lane et al., 2015). When WW-reuse results in water resource savings (as in coastal situations or when groundwater is used in a non-renewable way), local water scarcity also becomes a key parameter when the environmental impact of avoided local water deprivation is assessed. Thus, the environmental evaluation of WW-reuse as a non-conventional water resource depends on a water-energy nexus linking local water availability with the impact of water treatment.

In terms of decision support for the choice of reclaimed water as a relevant water resource among other options, not only economic but also environmental issues should be taken into account. Hence, it is necessary to identify the conditions for which the environmental impacts of WW-reuse (energy, infrastructure, etc.) are lower than the expected environmental benefits (water resource and nutrients saving). With Life Cycle Assessment (LCA), as a holistic tool, the global environmental efficiency of WW-reuse can be evaluated, including the impacts of water deprivation, the type of treatment technology and the energy consumption. In this context, a literature review must be conducted to identify the various approaches used and the types of case studies already investigated. On this basis, it should become possible to define the problems to be solved in order to propose and apply a coherent and harmonised approach.

2 Literature review and purpose of the study

Several studies on the environmental assessment of WW-reuse have been carried out, many of which have implemented LCA methodology. In order to draw the lessons to be learned from these publications, a literature review was conducted (keywords “LCA” and “wastewater reuse” within exclusively scientific journals, i.e. excluding grey literature) and summarized in Figure 1 (see Appendix A, Table A.1 for the complete literature review). Among the 30 articles, two categories of reuse situations have been identified: (i) the reuse of urban wastewater treatment plant (WWTP) effluent (i.e. wastewater collected on a territorial scale and originating from domestic, industrial and/or run-

84 off sources) and (ii) the reuse of raw wastewater (i.e. before collection), directly at the site of
85 generation (in-situ). This second type of effluent mainly derives from domestic (source separation) or
86 industrial (recycling) reuse cases. In both situations: post-WWTP reuse and raw wastewater reuse,
87 the effluents can be regenerated (generally through tertiary treatment) or not (direct reuse)
88 according to the reuse application and local water-use policies. Therefore, three major characteristics
89 can define a WW-reuse situation: the origin of the effluent, its optional treatment and the intended
90 wastewater user.

All bibliographic references and details available in Appendix Table A.1.		Water scarcity (1)	WW-reuse scenario				Baseline scenario to which WW-reuse is compared				Type of water consumption accounting (when the water balance of the studied system is realized)	Sensibility of the results to different energy mix tested
			Wastewater user				Water resource supply		Wastewater discharge destination			
			Agriculture (irrigation)	Urban (2)	Industry	Artificial GW recharge	Local water resource	Average tap water from databases	To sea (coastal location)	To inland natural stream		
Post-WWTP urban reuse	Virtual or partially generic case studies *											
	Akhoundi and Nazif, 2018	Arid	x		x							
	Büyükkamaci and Karaca, 2017	Semi-arid	x									x
	Carré et al., 2017	Temperate	x									
	Lane et al., 2015	Arid	x	x			x		x		c	
	O'Connor et al., 2014	Arid	x					x		x	v	
	Opher and Friedler, 2016	Arid		x			x			x	c	x
	Specific case studies**											
	Arzate et al., 2019	Arid	x					x	x		v	
	Awad et al., 2019	Arid	x					x		x		
	Bravo and Ferrer, 2011	Arid	x			x						
	Foglia et al., 2021	Semi-arid	x				x			x	c	
	Friedrich et al., 2009	Semi-arid			x		x		x			
	Hsien et al., 2019	Temperate		x	x		x		x		v	
	Kamble et al., 2017	Semi-arid	x					x		x		
	Laitinen et al., 2017	Semi-arid	x									
	Meneses et al., 2010	Arid	x	x				x	x		v	
	Muñoz et al., 2009	Arid	x					x		x		
	Muñoz et al., 2010	Arid	x				x		x		c	
	Ortiz et al., 2007	Arid	x	x	x	x						x
	Pasqualino et al., 2010	Arid		x				x	x		c	
	Pillay, 2006	Semi-arid			x							
	Pintilie et al., 2016	Arid			x		x		x		c	
	Polruang et al., 2018	Temperate	x					x		x		x
	Raghuvanshi et al., 2017	Semi-arid	x					x		x		
	Singh et al., 2018	Semi-arid	x	x				x		x		
	Zhang et al., 2010	Semi-arid		x	x		x			x		
	Zhao et al., 2015	Semi-arid	n.a.	n.a.	n.a.	n.a.		x				
Domestic effluent reuse (source separation systems)	Virtual or partially generic case studies											
	García-Montoya et al., 2016	Semi-arid		x				x		x	v	
	Case studies**											
	Cornejo et al., 2013	Temperate	x				x			x		
	Lam et al., 2015	Semi-arid	x					x	x		v	
	Lutterbeck et al., 2017	Temperate		x								
	Romeiko, 2019	Semi-arid		x			x				c	

* Water treatment technology studies or city-scale virtual studies.
** Case studies : case studies or virtual cases with specific local data.
C: **Consumptive** accounting (withdrawal-release)
V: Volumetric freshwater **withdrawals** accounting only

(1) AWARE factors at country scale (Boulay et al. 2018)
Temperate: AWARE from 0,1 to 10
Semi-arid: AWARE from 10 to 60
Arid: AWARE from 60 to 100

(2) Includes indirect potable reuse, non-potable reuse and direct potable reuse for domestic or urban users.
No baseline scenario.
Out of the scope of the study.

91

92 *Figure 1 - Classification synthesis of WW-reuse LCA studies from a literature review of 30 publications.*

93 Only 7 out of the 30 reviewed articles attempt to address WW-reuse issues in a virtual or partially
94 generic manner (Figure 1). However, none of them are truly generic because they do not vary by
95 more than one or two parameters, such as applied technologies, electricity mix, water stress or
96 reference scenario. Thus, the vast majority of studies assessing the environmental performance of
97 WW- reuse (23 out of 30 reviewed papers) are directly linked to a particular geographical location

and to a specific case of application (water supply and/or wastewater user). In these case studies, the climatic context, and in particular the level of water scarcity, then becomes an important parameter (especially affecting the baseline water supply scenario). Unsurprisingly, for more than 80 % of reviewed cases, the WW-reuse situation is located in semi-arid to arid geographical areas.

The necessary comparison between the burdens of a WW-reuse situation (including zero discharge of wastewater which is reused with or without regeneration) and a baseline scenario (wastewater discharge and local or average conventional water supply) is not always achieved. Out of thirty studies, only thirteen compare the WW-reuse supply scenario with an average tap-water supply (conventional treatment from databases) and nine with a local water resource supply. In several cases, since water resource saving represents a basis hypothesis in WW-reuse, regardless of the initial destination of the reused effluent, a water consumption balance is not necessarily carried out between the baseline scenario and the WW-reuse scenario. Indeed, half of the studies that actually account for water consumption in both baseline and WW-reuse scenarios (in order to reveal water savings by reuse) use a volumetric method that only account for freshwater withdrawals at user. This hypothesis is not consistent with the ISO 14046 water footprint (based on LCA) which is very clear on this point: water consumption is water that has been removed from, but not returned to, the same waterbody (i.e. water withdrawal minus release). Indeed, on one hand, the presumption that WW-reuse systematically generates water savings is only valid in certain specific cases that will be described further on. On the other hand, although the energy consumption of the WW-reuse system (wastewater regeneration and supply system) is a major factor in its environmental performance, the effects of energy mix are lacking in most studies. Indeed, only four reviewed publications examine the influence of the electricity mix on WW-reuse environmental efficiency. In more than half of the studies, irrigation is identified as a potential wastewater use. Other wastewater consumers are investigated for non-potable domestic or urban use, groundwater artificial recharge or industrial use.

Consequently, LCA that includes water footprint indicators should support decision-making by identifying and differentiating situations where WW-reuse is environmentally advantageous from

those where the local water resource remains less impacting. However, this literature review highlights two challenges in state of the art environmental assessments of WW-reuse: (i) the heterogeneity of the assumptions of WW-reuse LCA studies (especially concerning the water balance, the perimeter of the system and the lack of comparison with a reference system); (ii) the fact that most case studies concern coastal areas where water is scarce. This paper aims at answering these two issues by proposing a homogeneous and robust LCA framework for WW-reuse environmental assessment and applying it to a global case study, across contrasting situations representative of current WW-reuse problematics. To be consistent with the main water use targeted (and thus mostly concerned by water scarcity and climate change), the chosen case study corresponds to the main WW-reuse application scenario: urban WWTP effluent reuse for irrigation. As discussed previously, water scarcity, geographical location (littoral or continental), and energy mix are fundamental parameters whose influence have been examined.

3 Material and methods

The methodological framework of this study is based on the four steps of Life Cycle Assessment (LCA) as defined in ISO 14040 and 14044 standards (ISO 14040, 2006; ISO 14044, 2006): (i) Goal & scope definition (section 2.1), (ii) Life Cycle Inventory (LCI, section 2.2), (iii) Life Cycle Impact Assessment (LCIA, section 2.3) and (iv) Interpretation of results (section 3).

3.1 Goal and scope definition

3.1.1 Goal

The goals of this study are (i) to elaborate a robust and homogeneous framework for the evaluation of WW-reuse environmental efficiency and (ii) to apply it to a few worldwide archetype situations to better identify the main drivers of the environmental efficiency of wastewater reuse. In this view, a generic evaluation of the eco-efficiency of WW-reuse was achieved through the life cycle assessment (LCA) of the most commonly applied WW-reuse scenario (urban WW-reuse for irrigation). By

comparing the environmental burdens of the WW-reuse scenario with those of a baseline water supply scenario, under contrasting climatic and geographical conditions, the present objective is to identify situations (and associated driving parameters) where WW-reuse proves to be of environmental relevance. The proposed approach should allow for generic results to be generated from any specific case study for guidance in decision making. Indeed, the results could then be optimised by adjustment of parameters).

3.1.2 Scope of the study, functional unit and system boundaries

The WW-reuse application selected for this study is an urban WWTP effluent reused for local irrigation. This scenario is compared to a baseline scenario (Figure 2) that corresponds to a local water supply mix for irrigation, based on the WSmix (Water Supply mix) model (Leão et al., 2018). In order to avoid masking effects, all other parameters that are equivalent in WW-reuse vs. WSmix comparisons are removed from LCA calculations (ceteris paribus, Figure 2 and Figure 3). The functional unit is the supply of 1 m^3 of water at the user gate (irrigated plot). The WWTP effluent discharge to the local water body is included in the system boundary as an avoided impact in the reuse scenario. In agriculture, WW-reuse can also provide nutrients for fertigation (Meneses et al., 2010) and their nitrogen or phosphorus content is largely dependent on the type of wastewater treatments. Thus, the nutrient content of reclaimed water for irrigation entails an environmental benefit since it avoids fertilizer production.

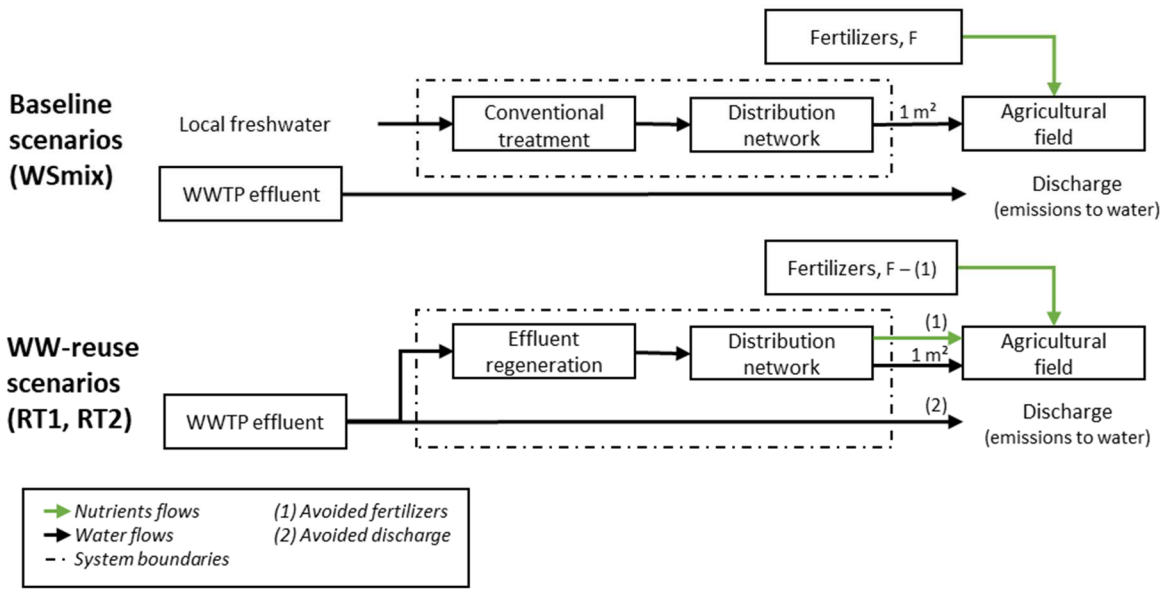

Figure 2 - System boundaries for both WW-reuse and Baseline scenario

An exhaustive representation of system boundaries is available in the supplementary Appendix A, Figure A.1. The water balance of the studied systems differs according to the geographical location: whether it is coastal or continental. In a continental water basin, the amount of water consumed, defined as the difference between withdrawal and discharge (ISO 14046), is the same for both scenarios (Figure 3). This balance is valid, assuming a renewable use of groundwater resources and considering the recharge of the local water basin through the discharge of treated wastewater. In this case, WW-reuse does not lead to water saving. However, when wastewater is discharged into the sea, all water withdrawals from the catchment area are considered as water consumption. Thus, as long as these assumptions are made, WW-reuse only leads to water saving in coastal areas.

This work is limited to the following two contrasting case studies: (i) coastal areas where treated wastewater is discharged into the sea and therefore lost and (ii) continental areas where treated wastewater is returned to the local water body (i.e. not lost). It is obvious that many other specific configurations exist, such as WWTP discharge into intermittent streams in dry areas where discharges never return to the waterbody were water was originally extracted. It would be difficult to consistently take this type of very specific situation into account as long as LCA does not comprise a

water fate model that enables the interactions between different water compartments to be assessed (surface water, groundwater, soil, vegetation, atmospheric moisture, etc.), as discussed by Núnez et al., 2018.

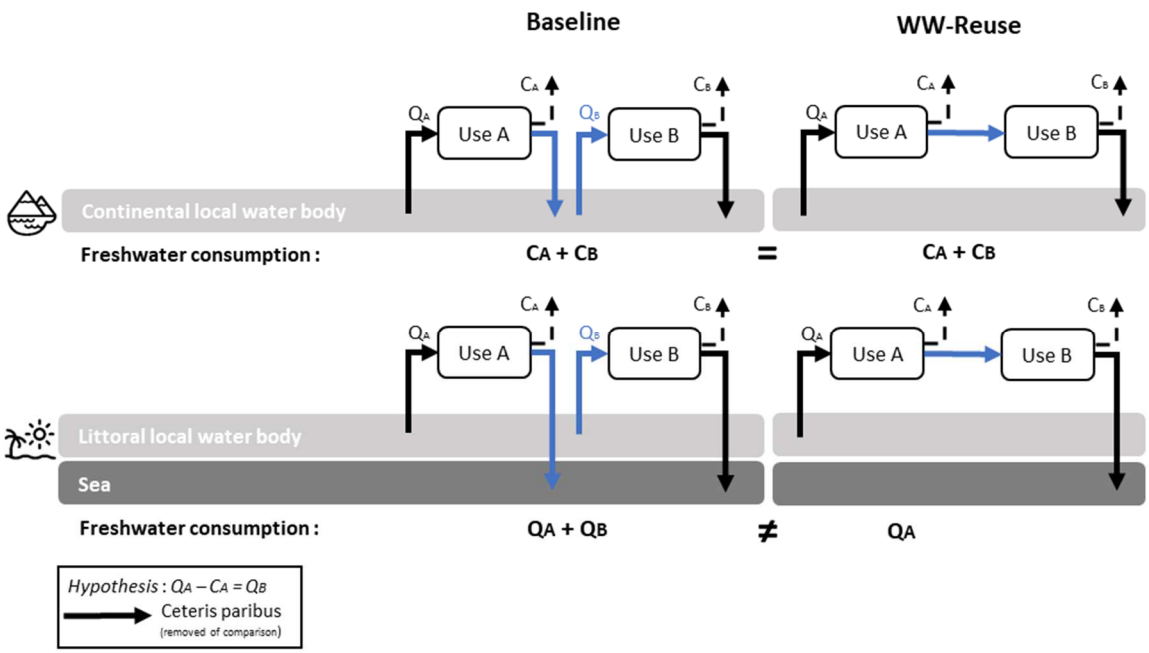

Figure 3 - Water balance for both littoral and continental location of WW-reuse and Baseline scenarios.

3.1.3 Sets of parameters and experimental protocol

The goals of the study are to compare (i) some archetypes of wastewater reuse with (ii) a set of 3 contrasting water supply mixes (WSmix) described in section 2.2.1. For each of the two studied systems (irrigation water provided by an agricultural WSmix or treated urban WWTP effluent), the main key parameters are identified in order to build a versatile experimental protocol, which would reflect the different WW-reuse situations. First, the coastal locations are distinguished from the continental locations as this directly affects the water balance and thus the water saving potential by WW-reuse. Water scarcity levels and electricity mix are two other parameters which have been chosen to reflect impact of the water-energy nexus on WW-reuse environmental efficiency. Concerning the baseline scenario, three WSmix are investigated by varying the origin of the water resource: a world average conventional WSmix, a non-renewable WSmix from groundwater resource

and an unconventional WSmix from desalinated seawater. The regeneration technology train (RT, combination of several treatment units) mainly defines the WW-reuse scenario. “Fit-to-purpose” wastewater regeneration generally involves tertiary (or advanced) treatment technologies. The range of technologies for reclaimed water treatment for irrigation depends both on the quality of the effluent and on the regulations for reclaimed water quality. It spans from mild treatment, generally physico-chemical processes and disinfection (e.g. advanced oxidation processes in Arzate et al., 2019, sand filtration and UV disinfection in Carré et al., 2017 or coagulation-flocculation, chlorination and UV disinfection in Meneses et al., 2010), to intensive treatment by membrane filtration (e.g., reverse osmosis in Bravo and Ferrer, 2011 and Hsien et al., 2019 or ultrafiltration in Büyükkamaci and Karaca, 2017 and Carré et al., 2017). Thus, two representative regeneration trains have been investigated: a mild-treatment RT1 (sand filtration, coagulation-flocculation, ultra-violet disinfection) and an intensive treatment RT2 (sand filtration, coagulation-flocculation, microfiltration, reverse osmosis, ultra-violet disinfection). Therefore, the implementation of the environmental efficiency evaluation of a selected WW-reuse application is based on the comparison (by LCA) of the environmental burdens of three representative water supply alternatives (Baseline, WW-reuse RT1, WW-reuse RT2) in contrasting climatic and geographical situations (supplied by different electricity mix grids).

3.2 Life cycle inventory and data source (LCI)

A life cycle inventory (LCI) was assembled for each scenario, according to a three-step structure (following WSmix structure by Leão et al., 2018): 1. Extraction, transportation and storage, 2. Water treatment and 3. Distribution to user (Appendix A, Table A.2). LCI data were derived from Ecoinvent v3.5 database (Wernet et al. 2016) using world-average processes for most inputs (except electricity and water flows) and modelled in the SimaPro 9.0 LCA software.

3.2.1 WSmix (Water Supply mix)

The world average WSmix considered in the baseline scenarios is based on an annual average WOmix (water origin mix) for irrigation in thirty seven developed countries (weighted with country

population) using local conventional water sources (surface and groundwater) and no water-treatment (weighted average model and data from Leão et al., 2019). A non-renewable WSmix based exclusively on over-exploited groundwater (i.e. groundwater from a fossil stock or extracted from a water table with a withdrawal rate greater than the annual renewal rate) is also considered. Finally, the third WSmix studied in the baseline scenarios is an unconventional WSmix entirely composed of desalinated seawater (desalination process from the Ecoinvent v3.5 database, modified to take into account the specific energy mix considered in the experimental design).

3.2.2 Local specificities

Three virtual climate locations representing contrasting water scarcity situations are defined. The temperate region is based on French data while the arid region originating from Algerian data, is adapted for high or low HDI. Similarly, contrasting energy mixes derive from Portuguese data (renewable mix), Indian data (mix with a strong environmental impact, mainly from coal) and world average data (Ecoinvent v3.5). Table 1 provides specific LCI data for the experimental protocol (and detailed parameter data are available in Appendix A, Table A.3).

3.2.3 Treatment technologies

The inventory of the two regeneration trains (RT1 and RT2) is based on literature (Table 1), considering major chemical (or consumable) inputs and energy consumption for each technology. Infrastructure is neglected because it is considered to have a minor contribution to total impacts (Hsien et al., 2019). Water recovery ratios (reject or concentrates) for all technologies involved are available in Appendix A, Table A.4.

3.2.4 Additional considerations

The amount of avoided fertilizer production thanks to irrigation with reclaimed water (cf. Table 1) is estimated using an average nutritional content of tertiary treatment effluents (Meneses et al., 2010) and considering ammonium, nitrate and phosphate as a replacement for synthetic fertilizer. The

amount of avoided discharges (pollutants to water) resulting from the reuse of WWTP effluent are modelled by water discharge and emissions to water flows from an Ecoinvent dataset for an average domestic WWTP (Dataset name: Wastewater, from residence {RoW}| treatment of, capacity 1.1E10l, detail of avoided emissions content in Appendix A Table A.5). Soil emissions of pollutant residues from irrigation water are not taken into account because they stand outside the scope of the study (water supply at agricultural plot gate). Finally, the tertiary treatment concentrates are considered to return to the local WWTP and the management of their end of life (treatment and emission to water) is modelled using an average secondary treatment from the Ecoinvent database ("Wastewater, from residence {RoW}| treatment of, capacity 1.1E10l/year", modified to take into account the specific energy mix of the experimental protocol).

3.3 LCIA methods

Endpoint indicators were used so comparison could be possible between the impacts related to water deprivation and those related to energy consumption on the same basis. Indeed, when dealing with water-energy nexus, end-point impact indicators provide more useful information for decision-making purposes than mid-point ones (as shown in Risch et al., 2014). Calculations are made according to the ReCiPe 2016 method (Huijbregts et al., 2016) as it includes recent water deprivation indicators for two of the three protection areas (impacts on human health and terrestrial vegetation based on Pfister et al., 2009 and impacts on aquatic ecosystems from Hanafiah et al., 2011). In this method, damage of water consumption to human health results from water shortages for irrigation, which potentially leads to malnutrition in countries with a human development index (HDI) equal to or less than 0.88. This is why the present experimental protocol distinguishes two locations where water is scarce and where the HDI is high or low. In this study, it is particularly fundamental that reclaimed water can be compared with conventional water from the extraction of non-renewable groundwater. This led the authors to add an end-point impact to ReCiPe 2016 which would contribute to area of protection “Resource depletion” based on Pfister et al., 2011. In this method,

273 the impact of the use of 1 m^3 of non-renewable groundwater on endpoint resources is equivalent to
274 the cost of extracting and processing seawater as an alternative resource (desalination, set at 1
275 $/m3).

276 **3.4 Uncertainty management**

277 Life cycle inventory (LCI) data can entail three main types of uncertainties: (i) quantitative
278 uncertainties related to the amount of technical flows (e.g. measured amount of energy consumed
279 daily or mass of materials used in an infrastructure), (ii) quantitative uncertainties related to the
280 amount of environmental flows (e.g. uncertainty linked to the amount of pollutant emitted in water
281 or air using an emission model) and (iii) qualitative uncertainties (data pedigree in Simapro software)
282 related to the choice of datasets in existing databases (e.g. is the steel inventory chosen within
283 Ecoinvent database to model an infrastructure representative of the steel actually used for this
284 infrastructure in this region of the world?). In order to provide consistent results to support decision-
285 making, it is essential to assess the uncertainty margins in the results, especially when comparing
286 data (in the present case: impacts of WSmix versus WW-reuse).

287 Consequently, an uncertainty analysis (Monte Carlo simulation available in SimaPro 9.0) has been
288 carried out. The Monte-Carlo method consists of repeating LCIA calculations, and generating for each
289 run a randomised value for every input of the inventory. For comparative LCAs (scenarios A versus B),
290 Monte-Carlo analysis calculates, for each impact category, the probability for the impacts of Scenario
291 A to be greater than those of Scenario B. Somehow, the Monte-Carlo method allows for a
292 combination between an uncertainty assessment and a sensitivity analysis of the results (variations
293 of inventory parameters in compliance with their statistical distribution laws).

294 This requires that the majority of the inventory data ought to be stochastic, i.e. LCI foreground and
295 background data sets should include distribution laws as well as the associated parameters for each
296 of their components. The uncertainty of 52% of the unit processes used for background activities
297 from Ecoinvent database (Ecoinvent, 2018) for this study were quantified by the “data pedigree”

(DQI) available in SimaPro as proposed by Ciroth et al., 2016. This algorithm relates the data uncertainty to its source characteristics based on 6 indicators: reliability of the source, representativeness of the sample, temporal correlation and geographical correlation, further technological correlation and in some cases sample size. The uncertainty in the primary foreground input data used for the Baseline and WW-reuse scenarios is mainly quantitative. It is described in Table 1 and detailed DQI selection criteria are available in Table A.6. The Monte-Carlo calculations were halted after a fixed number of runs (set at 1000, as recommended by PRé, 2016), producing cumulative LCA results with a 95% confidence interval.

The issue of water consumption uncertainty for background activities in Ecoinvent:

In Ecoinvent processes, water consumption data are provided by both input water withdrawal flows (input from nature) and output water discharge flows (emission to water). Water consumption impacts (water consumption, water scarcity, etc.) depend on the difference between withdrawal flows (CF>0) and discharge flows (CF<0). The uncertainty distribution is therefore independently filled out for water withdrawals and water discharges. Thus, in a Monte-Carlo uncertainty analysis, the water consumption balance (withdrawals - discharges) can be disturbed by random values and cause both negative impact values (water deprivation credit) and a wide range of uncertainties. In certain processes characterised by high water withdrawals and discharge flows (such as hydropower production), the uncertainty generated for water consumption impact indicators can reach very high values and mask all other uncertainties. As this masking effect concerns all background processes (especially the electricity mixes, used in almost all processes), it cannot be manually corrected. This issue has previously been identified by the LCA community and has not yet been solved in Ecoinvent. In this context, uncertainty analyses are performed after elimination of the problematic impact categories (i.e. no Monte-Carlo procedure for water consumption impact categories) and exclusively for comparisons where the foreground water balance is identical between scenarios (This is possible since background water consumption has a negligible impact – less than 2% of total impacts). For all

comparisons where this procedure was possible, stochastic calculations confirmed deterministic ones (i.e. for each comparison the same scenario has the lowest impacts for each end-point indicator).

3.5 Decision rules for scenario comparison

Synthesis of the results should lead to the evaluation of the overall eco-efficiency of the investigated scenarios and to the identification of circumstances in which WW-reuse is better or worse than the local water supply mix. In this view, end-point results have been compared and a scenario A can only be considered better than a scenario B if all 3 end-point impact categories are greater or equal for A (i.e. the 3 impacts of scenario A lower than those of B by at least 10%, calculated with Monte-Carlo uncertainty analysis as described in paragraph 2.4). It is thus noteworthy that no weighting or preference (explicit or implicit) between the 3 end-point categories had been implemented according to the LCA decision-support procedure proposed in Guérin-Schneider et al., 2018, where impact categories characterised by an insignificant difference (<10%) are considered to be equal.

4 Results

Figure 4 illustrates the LCA endpoint results for the whole experimental protocol: water scarcity effects at continental and littoral locations with groundwater overuse or renewable use, WOmix effects and electricity mix effects (both at littoral locations). This figure points out, for each situation, a comparison between the two WW-reuse scenarios with the WSmix baseline scenario. It also highlights, for each scenario, the main contributors to the impacts among (i) water deprivation at user gate, (ii) water treatment, (iii) water distribution and avoided impacts related to the reuse of WWTP effluent for irrigation (nutrient content and avoided discharge and emissions to water). Although all water consumption of the background processes are accounted for in the Ecoinvent v3.5 database, only foreground water consumptions can be isolated in the "water deprivation effects" category. Impacts related to water consumptions in the background processes of the studied systems contribute to all other categories.

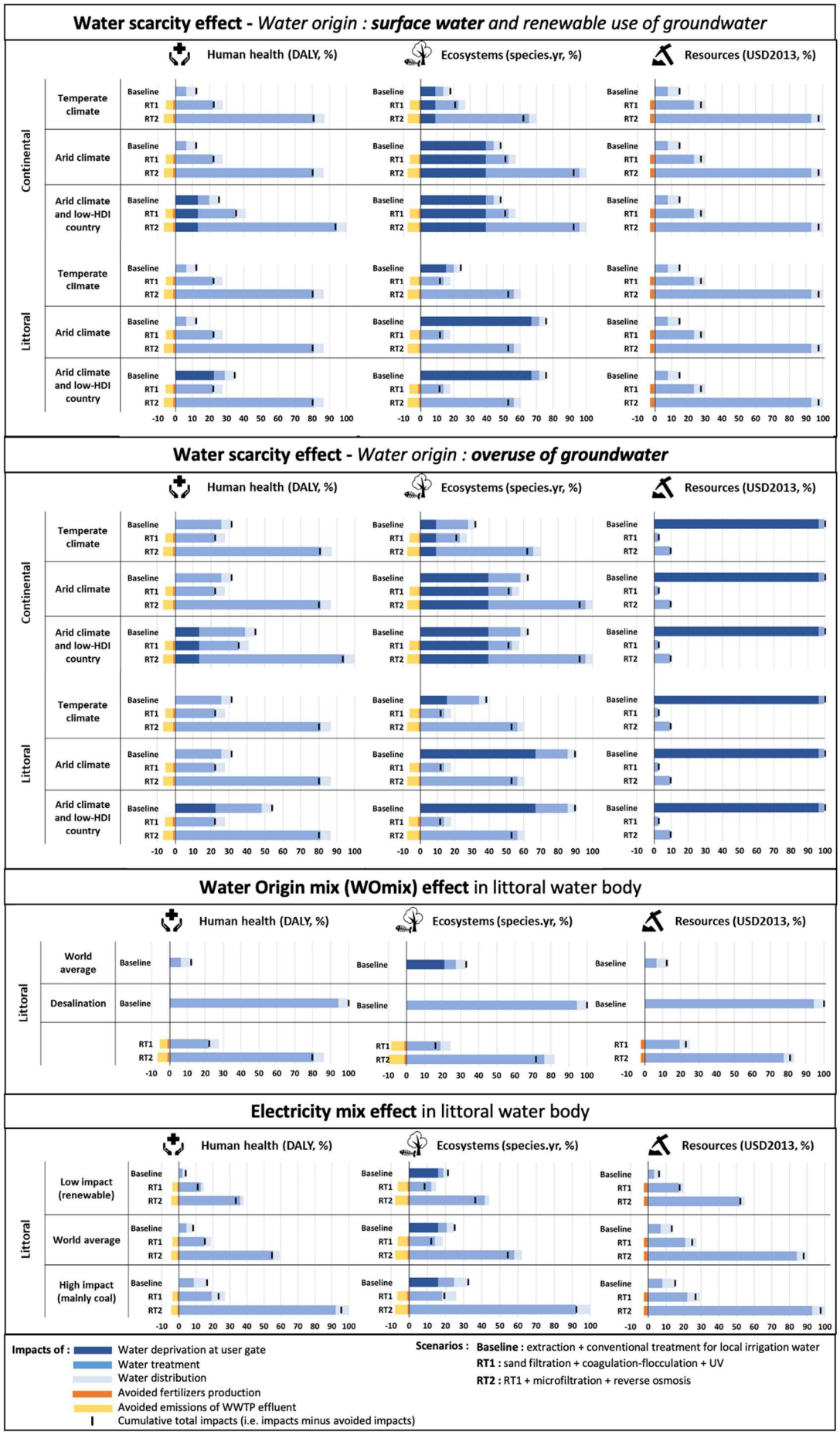
Water scarcity effect - Water origin : surface water and renewable use of groundwater
Human health (DALY, %)
Ecosystems (species.yr, %)
Resources (USD2013, %)
Continental
Littoral
Temperate climate
Arid climate
Arid climate and low-HDI country
Baseline
RT1
RT2
-10 0 10 20 30 40 50 60 70 80 90 100
Water scarcity effect - Water origin : overuse of groundwater
Water Origin mix (WOmix) effect in littoral water body
World average
Desalination
Electricity mix effect in littoral water body
Low impact (renewable)
High impact (mainly coal)
Impacts of :
Water deprivation at user gate
Water treatment
Water distribution
Avoided fertilizers production
Avoided emissions of WWTP effluent
Cumulative total impacts (i.e. impacts minus avoided impacts)
Scenarios :
Baseline : extraction + conventional treatment for local irrigation water
RT1 : sand filtration + coagulation-flocculation + UV
RT2 : RT1 + microfiltration + reverse osmosis

348 *Figure 4 – LCA results for the whole experimental protocol*

349 ## 4.1 Contribution analysis

350 In continental locations, Baseline and WW-reuse scenarios present the same water balance,
351 therefore water deprivation effects (at user gate) are equal, for each situation studied (water scarcity
352 effect). However, when located in a coastal region, water savings (no water deprivation effect due to
353 avoided discharge of WWTP effluent into the sea) are reflected in the three final impacts (human
354 health if low HDI, ecosystems and resources when groundwater is overexploited) and benefit WW-
355 reuse scenarios. This advantage is sufficiently relevant to enable improved environmental efficiency
356 of the mild treatment WW-reuse RT1 solution for both temperate and arid littoral regions when
357 groundwater is considered to be overexploited. Water treatment is a major contributor in all
358 scenarios, especially for energy intensive scenarios as WW-reuse RT2 (average contribution of 80 %),
359 and desalination Baseline (average contribution of 94 %), due to the use of membrane technologies.
360 The WW-reuse RT1 scenario and the world-average WSmix Baseline scenarios present a smaller, but
361 still significant, contribution of water treatment to their total environmental impacts (average of 55
362 % for RT1 and 37 % for Baseline). These ranges of contribution are consistent with the energetic
363 content of all scenarios. While WW-reuse RT2 and Desalination scenarios require 1,76 kWh and 2,78
364 kWh for 1 m^3 of treated water, only 0,225 kWh of electricity are consumed for the extraction of 1m^3
365 of water from the world average WSmix, and 0,161 kWh for 1m^3 of treated water with RT1 treatment
366 train (energetic content for all scenarios available in Appendix A Table A.7). Since the same local
367 water distribution was considered in all studied scenarios (corresponding to equal WWTP-agricultural
368 field and water source-field distances), its environmental impacts remain constant throughout the
369 results. However, it is noteworthy that water distribution represents a key contributor for the
370 Baseline scenario (average contribution of 22 %, excluding desalination case) and WW-reuse RT1
371 scenario (average contribution of 17 %) while it tops at 7 % for WW-reuse RT2 and 6 % for
372 desalination WOmix Baseline scenario. Avoided fertilizers due to WW-reuse present a low
373 contribution to all endpoint impacts of reuse scenarios (average of 3 % for RT1 and RT2). The avoided

impacts related to the non-discharge of WWTP effluent due to WW-reuse are higher, contributing up to 26 % of the overall impacts of the RT1 scenarios and 13 % of the RT2 scenarios (only visible in the Human Health and Ecosystem categories).

4.2 Water scarcity effect

In continental areas, regardless of the type of groundwater management, the level of water scarcity has an equal effect on all three scenarios, since they all have an equal water balance. Only in the case of a non-renewable groundwater resource does the water balance differ for the assessment of endpoint resource impacts. Indeed, in these latter cases, the discharge of water to the surface of water bodies does not recharge non-renewable groundwater reservoirs (considered as fossil or with a recharge time greater than consumption time). Water discharges therefore do not present any benefit to groundwater resources. Furthermore, in these situations the WW-reuse scenarios do not have any water consumption impact on resources (avoided discharges do not affect the non-renewable underground resource). In all continental climate areas, when the WOmix represents an overexploitation of groundwater, the RT1 WW-reuse scenario is more environmentally efficient than the baseline scenario.

Coastal groundwater renewable use

In littoral cases, water scarcity increases the water-consumption impacts of the baseline scenario. When the HDI is low (below 0.88), water consumption also generates impacts on human health (related to malnutrition resulting from water deprivation for the benefit of irrigation). This is once more unfavourable for the Baseline scenario in coastal areas. However, the global average WSmix still shows a lower impact on the resource end-point indicator.

Coastal groundwater overuse

Water depletion induced by excessive exploitation of groundwater is expressed in the endpoint indicator “Resources” as a surplus cost of desalinated water (Pfister et al., 2011). Thus, in arid coastal areas, and when the use of groundwater is non-renewable, the intensive WW-reuse scenario (RT2)

treatment is more eco-efficient than the baseline scenario for two of the three endpoint indicators: ecosystems and resources.

4.3 Effect of water origin

Since the energetic expense of the desalination treatment is even greater than that of the RT2 treatment, its environmental impacts are also highest. Therefore, the WW-reuse RT2 solution becomes more eco-efficient than desalination in the three protection areas. In this case, the water-distribution distance is another key parameter in order to differentiate an intensive regeneration treatment reuse solution from an unconventional WSmix based on desalination. For instance, when the WWTP is closer to the irrigated plot than the coast, the reuse RT2 scenario would be even more legitimate. When compared to a desalinated water supply, reuse RT1 is at least 67 % more efficient for the three environmental areas of protection.

4.4 Electricity mix effect

The composition of the energy mix influences the most energy-intensive contributors, such as the membrane processes of the RT2 reuse scenario. A more renewable energy mix would tend to favour reuse scenarios in coastal situations, because the extra cost of treatment can be offset by the achieved water savings (case of scenario RT1 on all impacts if a country with low HDI and a non-renewable use of resources is considered). Energy mix effects in urban WW-reuse environmental efficiency evaluation are limited because they affect freshwater treatment as well as regeneration water treatment.

5 Discussion

The overall performance of the different studied scenarios is summarized and presented in Figure 5, where, for each situation, the best scenario is identified between WW-reuse and Baseline (WSmix) or if no conclusion can be drawn (i.e. one scenario is better than the other on some impact categories

and worse on others). The scenarios were analysed and ranked by applying the decision rules proposed in section 2.5 for scenario comparison (based on stochastic LCA results from Monte-Carlo simulations).

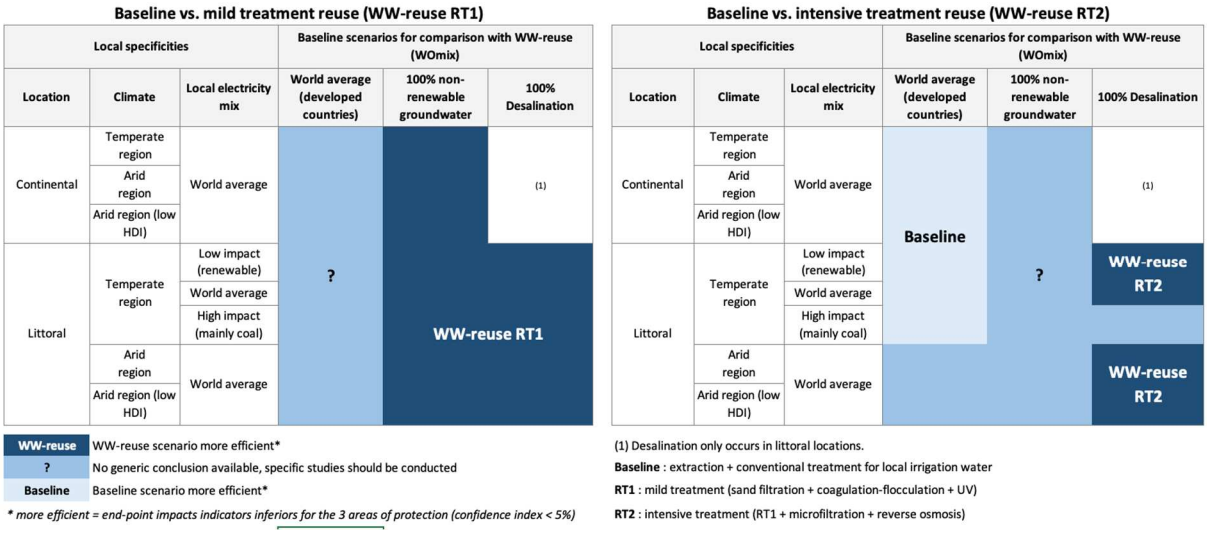

Figure 5 - Environmental efficiency of the two WW-reuse scenarios compared to the baseline scenarios after stochastisation of the endpoint results.

On one hand, when groundwater is exploited in a non-renewable manner, the reuse of moderately treated wastewater (as in RT1 scenario) is an environmentally efficient alternative to the world average water supply. On the other hand, when an intensive regeneration treatment is applied (membrane treatment as in RT2 scenario), the environmental benefit of WW-reuse remains uncertain and a world average supply is more efficient in the majority of cases (only the results in littoral arid regions are different). Finally, when compared with an unconventional supply of 100% desalinated water, WW-reuse is always environmentally beneficial.

In all situations where no generic conclusion can be made between Baseline and WW-reuse scenarios, a specific study should be conducted with site-specific data (WSmix, water distribution, wastewater treatment technology, water scarcity and electricity mix).

The aim of this study is to provide generic results in order to identify the principal parameters involved in WW-reuse environmental efficiency. The comparison with a baseline water supply

scenario is essential and should be as local as possible in a site-specific study. The lack of country-specific water extraction and treatment inventory data (water treatment technologies used are those currently available in LCI databases) affects the accuracy of the results. The large range of treatment trains for wastewater regeneration causes a large variability in the WW-reuse scenarios that can be studied; this depends on the wastewater quality and reclaimed water quality local policies. The case of raw wastewater reuse is not investigated here (no regeneration treatment) although it does correspond to current common irrigation practices in developing countries (untreated wastewater reuse is estimated to concern more than 13% of total irrigated croplands, Thebo et al., 2017).

All conclusions from this study can be influenced by local situations and in particular potential differences in the distance of the distribution network between WW-reuse and WSmix scenarios. For example, for irrigated plots in the immediate vicinity of a WWTP, wastewater reuse could be favourable over a wider range of situations than if the local water resource is far away. Local energy mix can also affect the results in particular in the case of different mixes between baseline and WW-reuse scenarios (reuse scenario could lower its environmental impact with a local renewable electricity mix from solar energy for example).

The consideration of pathogens for WW-reuse is still relatively complex (as shown by Truchado et al., 2018) and is even more complex in LCA (Harder et al., 2017). Due to the fact that direct WW-reuse was excluded from this study, the potential effects of pathogens were not taken into account, even though they might be of relevance. Another point is the difficulty to assess a specific water-balance configuration between the two contrasting geographical locations: littoral (= loss of wastewater discharge to the sea) and continental (wastewater discharges return back to original water bodies). Once a consistent water fate model will be made available, as proposed by Núnez et al., 2018, this study could be updated to integrate the subtleties between coastal and continental locations. Finally, it should be noted that WW-reuse was studied on the basis of average nutrient (N, P) concentrations observed in water discharges of current treatment plants. The potential for avoided fertilizers is therefore relatively low since one of the possibilities of current WWTPs is to denitrify in order to

avoid risks of eutrophication. A plant that would be able to reduce denitrifying during the WW-reuse period for irrigation (i.e. 2-3 months a year) could increase the environmental benefits of reclaimed water by significantly increasing the share of avoided fertilizers.

6 Conclusion

A literature review pointed out that most WW-reuse LCAs were based on very specific case studies, in which the conclusions were directly related to local conditions. The present study first clarified how to calculate the water consumed and/or saved on the basis of a mass balance between withdrawals and discharges, thus demonstrating that WW-reuse does not save water in all cases. Then, the study led to the definition of a robust and homogeneous framework to assess the environmental efficiency of WW-reuse as an alternative to a baseline water supply scenario. This framework has been applied to a representative WW-reuse application case (urban WW-reuse for agriculture) in contrasted but generic locations (in terms of water scarcity, continental or littoral location, water origin for irrigation supply and nature of electricity mix). Thus, situations were identified where wastewater reuse is clearly an environmentally good water supply solution (e.g. massive use on non-renewable groundwater, arid region, littoral location i.e. when WWTP effluent is discharged into the sea, tertiary treatment not too energy-intensive). On the contrary, this study also highlighted situations where reclaimed water supply for irrigation was less eco-efficient than the local WSmix (low water scarcity, inland location, advanced tertiary treatments for reclaimed water). Between these two types of situations, there are numerous cases where the situation cannot be easily distinguished and for which specific studies, accounting for each local situation, would be necessary for a significant comparison.

Finally, the proposed methodological framework and its illustrative application are addressed to LCA practitioners for future WW-reuse case studies. Furthermore, the studied experimental protocol and the generic conclusions associated with the WW-reuse case for agriculture provide insights for decision making and water supply system designers.

Research perspectives would be to extend this study to other cases of WW-reuse that are less common than the one studied (WW-reuse with tertiary treatment for irrigation) and to integrate the fate of pathogens into LCA as soon as scientific knowledge becomes more advanced in this field. Finally, it would be necessary to study in more detail the treatment plants of the future where the objective would no longer be to process a given waste (wastewater) but rather to recover its energy and nutrient content.

Acknowledgment

This research was supported by French state funds managed by the French National Agency for Research (ANR) through the MINIMEAU Project (ANR-17-CE10-0015).

References

AQUASTAT, n.d. AQUASTAT – FAO's Global Information System on Water and Agriculture. Rome, Foodand Agriculture Organization of the United Nations (FAO). www.fao.org/aquastat/en/

Allende, A., Truchado, P., Lindqvist, R., Jacxsens, L., 2018. Quantitative microbial exposure modelling as a tool to evaluate the impact of contamination level of surface irrigation water and seasonality on fecal hygiene indicator E. coli in leafy green production. Food Microbiol. 75, 82–89. https://doi.org/10.1016/j.fm.2018.01.016

Arzate, S., Pfister, S., Oberschelp, C., Sánchez-Pérez, J.A., 2019. Environmental impacts of an advanced oxidation process as tertiary treatment in a wastewater treatment plant. Sci. Total Environ. 694. https://doi.org/10.1016/j.scitotenv.2019.07.378

Boulay, A.M., Bare, J., Benini, L., Berger, M., Lathuillière, M.J., Manzardo, A., Margni, M., Motoshita, M., Núñez, M., Pastor, A.V., Ridoutt, B., Oki, T., Worbe, S., Pfister, S., 2018. The WULCA consensus characterization model for water scarcity footprints: assessing impacts of water

consumption based on available water remaining (AWARE). Int. J. Life Cycle Assess. 23, 368–378. https://doi.org/10.1007/s11367-017-1333-8

Bravo, L., Ferrer, I., 2011. Life cycle assessment of an intensive sewage treatment plant in Barcelona (Spain) with focus on energy aspects. Water Sci. Technol. 64, 440–447. https://doi.org/10.2166/wst.2011.522

Büyükkamaci, N., Karaca, G., 2017. Life cycle assessment study on polishing units for use of treated wastewater in agricultural reuse. Water Sci. Technol. 76, 3205–3212. https://doi.org/10.2166/wst.2017.474

Carré, E., Beigbeder, J., Jauzein, V., Junqua, G., Lopez-Ferber, M., 2017. Life cycle assessment case study: Tertiary treatment process options for wastewater reuse. Integr. Environ. Assess. Manag. 13, 1113–1121. https://doi.org/10.1002/ieam.1956

Ciroth, A., Muller, S., Weidema, B., Lesage, P., 2016. Empirically based uncertainty factors for the pedigree matrix in ecoinvent. Int. J. Life Cycle Assess. 21, 1338–1348. https://doi.org/10.1007/s11367-013-0670-5

Wernet, G., Bauer, C., Steubing, B., Reinhard, J., Moreno-Ruiz, E., Weidema, B., 2016. The ecoinvent database version 3 (part I): overview and methodology. Int. J. Life Cycle Assess. 21 (9), 1218e1230. https://doi.org/10.1007/s11367-016-1087-8

FAO, 2016. AQUASTAT Main Database, Food and Agriculture Organization of the United Nations (FAO).

Guérin-Schneider, L., Tsanga-Tabi, M., Roux, P., Catel, L., Biard, Y., 2018. How to better include environmental assessment in public decision-making: Lessons from the use of an LCA-calculator for wastewater systems. J. Clean. Prod. 187, 1057–1068. https://doi.org/10.1016/j.jclepro.2018.03.168

Hanafiah, M.M., Xenopoulos, M.A., Pfister, S., Leuven, R.S.E.W., Huijbregts, M.A.J., 2011. Characterization factors for water consumption and greenhouse gas emissions based on freshwater fish species extinction. Environ. Sci. Technol. 45, 5272–5278. https://doi.org/10.1021/es1039634

Harder, R., Peters, G.M., Ashbolt, N.J., Svanström, M., 2017. Using quantitative microbial risk assessment and life cycle assessment to assess management options in urban water and sanitation infrastructures: Opportunities and unresolved issues. Microb. Risk Anal. 5, 71–77. https://doi.org/10.1016/j.mran.2016.11.004

Hsien, C., Sze, J., Low, C., Fuchen, S.C., Han, T.W., 2019. Life cycle assessment of water supply in Singapore — A water-scarce urban city with multiple water sources. Resour. Conserv. Recycl. 151, 104476. https://doi.org/https://doi.org/10.1016/j.resconrec.2019.104476

Huijbregts, M., Steinmann, Z.J.N., Elshout, P.M.F.M., Stam, G., Verones, F., Vieira, M.D.M., Zijp, M., van Zelm, R., 2016. ReCiPe 2016. Natl. Inst. Public Heal. Environ. 194. https://doi.org/10.1007/s11367-016-1246-y

Iannelli, R., Giraldi, D., 2011. Sources and composition of sewage effluent; treatment systems and methods, in: Treated Wastewater in Agriculture, First Edition, Edited by Guy J. Levy, Pinchas Fine and Asher Bar-Tal. pp. 201–254. https://doi.org/10.1007/3-540-31301-X_14

ISO, 2014. ISO 14046:2014 (E) Environmental management. Water footprint - principles, requirements and guidelines, n.d.

ISO, 2006. ISO 14040 - Environmental Management - Life Cycle Assessment - Principles and Framework and ISO 14044 - Life cycle assessment - Requirements and guidelines

Lane, J.L., de Haas, D.W., Lant, P.A., 2015. The diverse environmental burden of city-scale urban water systems. Water Res. 81, 398–415. https://doi.org/10.1016/j.watres.2015.03.005

Lautze, J., Stander, E., Drechsel, P., da Silva, a. K., Keraita, B., 2014. Global Experiences in Water Reuse. Colombo, Sri Lanka: International Water Management Institute (IWMI). CGIAR Research Program on Water, Land and Ecosystems (WLE). 31p. (Resource Recovery and Reuse Series 4). doi: 10.5337/2014.209. https://doi.org/10.5337/2014.209

Lazarova, V., Asano, T., Bahri, A., Anderson, J., 2013. Milestones in Water Reuse: The Best Success Stories, Milestones in Water Reuse: The Best Success Stories. https://doi.org/10.2166/9781780400716

Leão, S., Roux, P., Loiseau, E., Junqua, G., Rosenbaum, R.K., 2019. Operationalisation and application of water supply mix (WSmix) at worldwide scale: how does WSmix influence the environmental profile of water supply for different users? Int. J. Life Cycle Assess. https://doi.org/10.1007/s11367-019-01630-w

Leão, S., Roux, P., Núñez, M., Loiseau, E., Junqua, G., Sferratore, A., Penru, Y., Rosenbaum, R.K., 2018. A worldwide-regionalised water supply mix (WSmix) for life cycle inventory of water use. J. Clean. Prod. 172, 302–313. https://doi.org/10.1016/j.jclepro.2017.10.135

Mekonnen, M.M., Hoekstra, A.Y., 2016. Sustainability: Four billion people facing severe water scarcity. Sci. Adv. 2, 1–7. https://doi.org/10.1126/sciadv.1500323

Meneses, M., Pasqualino, J.C., Castells, F., 2010. Environmental assessment of urban wastewater reuse: Treatment alternatives and applications. Chemosphere 81, 266–272. https://doi.org/10.1016/j.chemosphere.2010.05.053

Muñoz, I., Milà-I-Canals, L., Fernández-Alba, A.R., 2010. Life Cycle Assessment of Water Supply Plans in Mediterranean Spain: The Ebro River Transfer Versus the AGUA Programme. J. Ind. Ecol. 14, 902–918. https://doi.org/10.1111/j.1530-9290.2010.00271.x

Núnez, M., Rosenbaum, R.K., Karimpour, S., Boulay, A.M., Lathuillière, M.J., Margni, M., Scherer, L., Verones, F., Pfister, S., 2018. A Multimedia Hydrological Fate Modeling Framework to Assess Water Consumption Impacts in Life Cycle Assessment. Environ. Sci. Technol. 52, 4658–4667. https://doi.org/10.1021/acs.est.7b05207

O'Connor, M., Garnier, G., Batchelor, W., 2014. Life cycle assessment comparison of industrial effluent management strategies. J. Clean. Prod. 79, 168–181. https://doi.org/10.1016/j.jclepro.2014.05.066

Opher, T., Friedler, E., 2016. Comparative LCA of decentralized wastewater treatment alternatives for non-potable urban reuse. J. Environ. Manage. 182, 464–476. https://doi.org/10.1016/j.jenvman.2016.07.080

Pasqualino, J.C., Meneses, M., Castells, F., 2010. Life Cycle Assessment of Urban Wastewater Reclamation and Reuse Alternatives. J. Ind. Ecol. 15, 49–63. https://doi.org/10.1111/j.1530-9290.2010.00293.x

Pedrero, F., Kalavrouziotis, I., Alarcón, J.J., Koukoulakis, P., Asano, T., 2010. Use of treated municipal wastewater in irrigated agriculture-Review of some practices in Spain and Greece. Agric. Water Manag. 97, 1233–1241. https://doi.org/10.1016/j.agwat.2010.03.003

Pfister, S., Koehler, A., Hellweg, S., 2009. Assessing the Environmental Impact of Freshwater Consumption in Life Cycle Assessment. Environ. Sci. Technol. 43, 4098–4104. https://doi.org/10.1021/es802423e

Pfister, S., Saner, D., Koehler, A., 2011. The environmental relevance of freshwater consumption in global power production. Int. J. Life Cycle Assess. 16, 580–591. https://doi.org/10.1007/s11367-011-0284-8

Pintilie, L., Torres, C.M., Teodosiu, C., Castells, F., 2016. Urban wastewater reclamation for industrial reuse: An LCA case study. J. Clean. Prod. 139, 1–14. https://doi.org/10.1016/j.jclepro.2016.07.209

PRé, Mark Goedkoop, Michiel Oele, Jorrit Leijting, Tommie Ponsioen, E.M., 2016. Introduction to LCA with SimaPro.

Risch, E., Loubet, P., Núñez, M., Roux, P., 2014. How environmentally significant is water consumption during wastewater treatment?: Application of recent developments in LCA to WWT technologies used at 3 contrasted geographical locations. Water Res. 57, 20–30. https://doi.org/10.1016/j.watres.2014.03.023

Sala, L., Serra, M., 2004. Towards Sustainability in Transport. Water Sci. Technol. 50, 1–7.

Soto-García, M., Martin-Gorriz, B., García-Bastida, P.A., Alcon, F., Martínez-Alvarez, V., 2013. Energy consumption for crop irrigation in a semiarid climate (south-eastern Spain). Energy 55, 1084–1093. https://doi.org/10.1016/j.energy.2013.03.034

Spellman, F.R., 2013. Water & Wastewater Infrastructure: Energy Efficiency and Sustainability. CRC Press, Taylor & Francis Group, Boca Raton.

Thebo, A.L., Drechsel, P., Lambin, E.F., Nelson, K.L., 2017. A global, spatially-explicit assessment of irrigated croplands influenced by urban wastewater flows. Environ. Res. Lett. 12. https://doi.org/10.1088/1748-9326/aa75d1

Truchado, P., Hernandez, N., Gil, M.I., Ivanek, R., Allende, A., 2018. Correlation between E. coli levels and the presence of foodborne pathogens in surface irrigation water: Establishment of a sampling program. Water Res. 128, 226–233. https://doi.org/10.1016/j.watres.2017.10.041

WWAP (United Nations World Water Assessment Program), 2017. The United Nations World Water Development Report 2017. Wastewater: The Untapped Resource. Paris, UNESCO. https://doi.org/10.1017/CBO9781107415324.004

Tables

Table 1 - Main inventory components for compared scenarios

Appendix A. Supplementary material

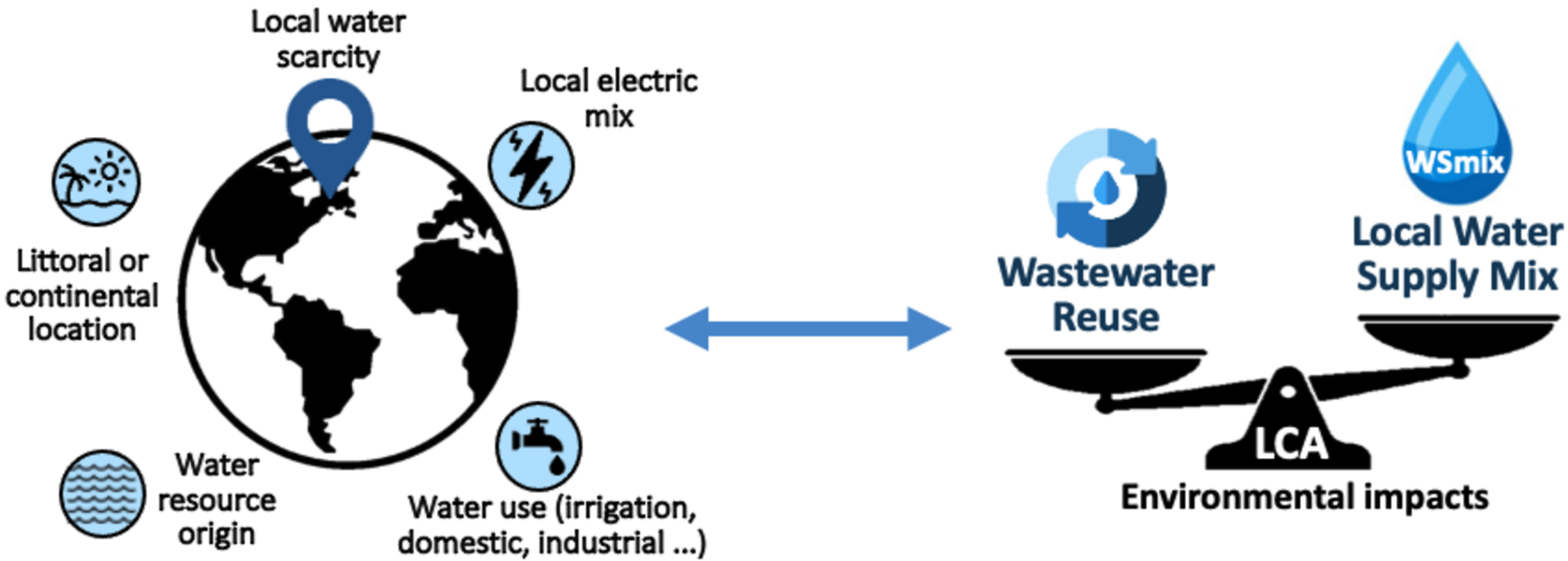
Local water scarcity
Local electric mix
Littoral or continental location
Water resource origin
Water use (irrigation, domestic, industrial ...)
Wastewater Reuse
WSmix
Local Water Supply Mix
LCA
Environmental impacts