HAL open science

Assessing the roles of crops and livestock in nutrient circularity and use efficiency in the agri-food-waste system: A set of indicators applied to an isolated tropical island

Vivien Kleinpeter, Manon Alvanitakis, Mathieu Vigne, Tom Wassenaar, Danny Lo Seen, Jonathan Vayssières

To cite this version:

Vivien Kleinpeter, Manon Alvanitakis, Mathieu Vigne, Tom Wassenaar, Danny Lo Seen, et al.. Assessing the roles of crops and livestock in nutrient circularity and use efficiency in the agri-food-waste system: A set of indicators applied to an isolated tropical island. Resources, Conservation and Recycling, 2023, 188, pp.106663. 10.1016/j.resconrec.2022.106663 . hal-03814913

HAL Id: hal-03814913

https://hal.inrae.fr/hal-03814913v1

Submitted on 23 Feb 2024

HAL is a multi-disciplinary open access archive for the deposit and dissemination of scientific research documents, whether they are published or not. The documents may come from teaching and research institutions in France or abroad, or from public or private research centers.

L'archive ouverte pluridisciplinaire **HAL**, est destinée au dépôt et à la diffusion de documents scientifiques de niveau recherche, publiés ou non, émanant des établissements d'enseignement et de recherche français ou étrangers, des laboratoires publics ou privés.

Version of Record: https://www.sciencedirect.com/science/article/pii/S0921344922004967
Manuscript_5664a9fa2fd8d1941ad0a8377079258d

Assessing the roles of crops and livestock in nutrient circularity and use efficiency in the agri-food-waste system: a set of indicators applied to an isolated tropical island

Vivien, Kleinpeter. Cirad, umr Selmet, F-97410 Saint-Pierre, Reunion, France. Selmet, Univ Montpellier, Cirad, Inrae, Institut Agro, Montpellier, France.

Manon, Alvanitakis. Cirad, umr Selmet, F-97410 Saint-Pierre, Reunion, France. Selmet, Univ Montpellier, Cirad, Inrae, Institut Agro, Montpellier, France.

Mathieu, Vigne. Cirad, umr Selmet, Antsirabe, Madagascar. Selmet, Univ Montpellier, Cirad, Inrae, Institut Agro, Montpellier, France.

Tom, Wassenaar. Cirad, upr Recyclage et Risque, F-34398 Montpellier, France. Recyclage et Risque, Univ Montpellier, Cirad, Montpellier, France.

Danny, Lo Seen. Cirad, umr Tetis, F-97410 Saint-Pierre, Reunion, France. Tetis, univ montpellier, Agroparistech, Cirad, Cnrs, Inrae, Montpellier, France.

Jonathan, Vayssières. Cirad, umr Selmet, F-97410 Saint-Pierre, Reunion, France. Selmet, Univ Montpellier, Cirad, Inrae, Institut Agro, Montpellier, France.

Corresponding author:
Vivien Kleinpeter
vivien.kleinpeter@cirad.fr

Abstract

Increasing nutrient circularity and use efficiency is a leading topic in the search for more sustainable agri-food-waste systems (AFWS). This paper proposes a method to assess the role of crops and livestock in nutrient circularity and use efficiency in an AFWS. The method is based on the analysis of nutrient flows, a detailed typology of flows, and a set of 3 groups of indicators to characterise (i) circularity between sub-systems, (ii) the process efficiency of the sub-systems and (iii) the efficiency of the AFWS. The method is illustrated using the nitrogen metabolism of the AFWS of a tropical Island, French Reunion Island. The island's current nitrogen use efficiency is very low (0.7%). Crops and livestock are major sources of inefficiencies due to their processes, they account for respectively, 42% and 9% of total AFWS inefficiency. However, crops and livestock are involved in circularity, as they play, respectively, a recycling receiver and recycling supplier role. Among the internal recycling routes between all sub-systems, 41% go to crops and 31% come from livestock. The paper argues that circularity and process efficiency are not objectives *per se* but means to achieve AFWS efficiency, and that the distinction between these three elements enable a systemic multi-level understanding of the roles of crops and livestock.

Key words: substance flow analysis (SFA), nitrogen, regional metabolism, circularity, efficiency, Reunion Island

© 2022 published by Elsevier. This manuscript is made available under the Elsevier user license
https://www.elsevier.com/open-access/userlicense/1.0/

1. Introduction

Agri-food systems (AFS) provide multiple services to human societies: human food (and more generally food security), animal feed, bio-energy (bio-fuel, dung), animal traction for transport, leisure, cultural activities, ornamental plants, construction materials and clothing (Willemen et al., 2010; Huang et al., 2015; FAO, 2021). However, AFS can also have negative environmental impacts resulting from the alteration of nutrient cycles. Inputs to agri-food systems require the extraction of limited resources, particularly phosphorus (P) from mines (Liu et al., 2010) and non-renewable fossil energy (Service, 2014). The use of non-renewable fossil energy also results in greenhouse gas (GHG) emissions (CO_2), which contribute to climate change (Crippa et al., 2021). AFS are also responsible for large releases of reactive nitrogen (N) into the atmosphere, leading to N cascade effects (Gruber and Galloway, 2008) (i) increasing GHG emissions (N_2O) and (ii) increasing atmospheric deposition (NOx and NH_3) thereby affecting the productivity, functioning and composition of natural and cultivated ecosystems, the eutrophication of terrestrial and aquatic systems (NO_3-), and global acidification. Nutrients that leave the AFS through runoff and leaching may also contribute to eutrophication (Carpenter et al., 1998). Today, the interference of human activities in N and P cycles is considered to have gone beyond planetary boundaries, i.e. beyond the safe operating space for human society to maintain the resilience of the Earth's system (Rockström et al., 2009; Steffen et al., 2015).

Reducing the negative impacts of AFS on these nutrient cycles requires reducing the nutrient use efficiency gap of the system itself, i.e. the gap between the current and achievable system nutrient use efficiency (Cui et al., 2014). It is with this goal in mind that van der Wiel et al. (2020) extended the limits of AFS to all nutrient managing activities and coined the "agr**o**-food-waste" system, the latter being of composed of five interconnected sub-systems: crop (food) production, animal production, food and feed processing, consumption, and waste management. Based on the same reflexion, here we refer to an "agr**i**-food-waste" system (AFWS) which combines (i) the concepts of an agri-food system (FAO, 2021) (including both food and non-food agricultural production), (ii) current connected activities in terms of material flows containing nutrients (e.g. waste management, energy production) and (iii) potential other connectable waste management activities.

By focusing on the local environmental impacts of an AFWS, without seeking to change local economic activities or human dietary habits (i.e. structural changes), the nutrient use efficiency gap of the system could be reduced by two means (i) increasing circularity between sub-systems and (ii) increasing the internal (i.e. processes) efficiency of sub-systems. These two concepts of circularity and process efficiency has not yet been considered as two separate parts of a systemic AFWS efficiency approach but are often used separately to assess or evaluate AF(W)Ss and/or their sub-systems (Zhang et al., 2015; van der Wiel et al., 2020).

In particular, circularity reflects how nutrient cycles are closed (i.e. flows circulating among the sub-systems rather than leaving the system). The immediate action that can be taken to further close the cycles, without structural changes, is recycling unused secondary products (wastes and by-products) between different sub-systems (e.g. rather than putting them in landfills or discharging them into the environment). Process efficiency reflects how the different sub-systems limit the sources of inefficiency related to their processes themselves (e.g. losses into the atmosphere). Actions that can be taken without structural changes are (i) adjusting inputs to real needs (e.g. for livestock production: adjusting feed intake to needs) and (ii) reducing losses into the atmosphere and to the sub-soil and surface water (e.g. for crop production: burying fertiliser, in-soil incorporation of manure during spreading, sustainable soil quality management). It is important to distinguish between these two aspects (circularity and process efficiency) when assessing the roles of sub-systems in the efficiency of an AFWS as they represent two means to improve its efficiency, and thus enable a systemic multi-level understanding. The sub-systems we chose to focus on are crops and livestock as they play critical roles in the environmental impact of AF(W)S (Thévenot et al., 2013; Lassaletta et al., 2014; Zanten et al., 2018; Crippa et al., 2021). We chose to assess crops and livestock separately as they are two specific types of biophysical processes. Crop production depends on plant growth processes that differ from those involved in animal production, which depend on animal demographic and growth processes.

Among AFWS, crop and livestock production can play a negative role as they are known for their limited process efficiency (Vayssières and Rufino, 2012) and are sometimes responsible for unused secondary products (Hasler et al., 2015; FAO, 2018; Walling and Vaneeckhaute, 2020). Crop production causes N losses into the atmosphere when fertiliser is spread. Croplands are also the scene of many losses to the sub-soil and to surface water due to nutrient leaching and runoff. Losses could be due to over-fertilisation, but could also depend on the quality and structure of the soil. Livestock production leads to losses into the atmosphere from both manure storage and management. Livestock manure is also sometimes misused, i.e. is spread in areas where plant needs are already covered, simply to get rid of the manure. Some manure management also consists of N denitrification thereby intentionally breaking the N cycle. Livestock feeding is also often not adjusted to the animals' real needs, resulting in more nutrients in the manure, thereby increasing the openness of the nutrient cycles.

Crop and livestock production can also play a positive role in AFWS through process efficiency and circularity. Crops are the preferred target for organic wastes, as recycling to other activities mostly requires higher levels of technology (Harder et al., 2019). Livestock enables the recycling of secondary products that would otherwise remain unused, especially crop residues, weeds and spontaneous fodder (Oosting et al., 2021; Van Zanten et al., 2019). Livestock manure can supply organic matter for crop production, with beneficial effects on soil fertility (Leinweber et al., 1999). In many places, these practices contribute to crop-livestock integration, i.e. a combination of farming practices that favours circularity and efficiency within AFWS (Herrero et al., 2010; Stark et al., 2016).

The specific isolated roles of crop and livestock production in the nutrient use efficiency of AFWS have thus already been identified. However, their systemic role has not yet been characterised (i) in relation to all other sub-systems that comprise the AFWS and (ii) by distinguishing circularity and process efficiency as two separate parts of the nutrient use efficiency of the AFWS.

The purpose of this paper is to propose a method with quantitative indicators to characterise the role of crops and livestock in the nutrient use efficiency of an AWFS, in terms of nutrient process efficiency and circularity between sub-systems. The proposed method is illustrated in an isolated insular context, tropical Reunion Island, and with nitrogen metabolism.

The Reunion Island AFWS is a case study of interest because, on one hand, the AFWS is based on intensive production systems and large imports of inputs, while on the other hand, the proximity of economic activities facilitates the recycling of secondary products. Also, as Reunion Island is a well delimited region, existing databases already contain most of the necessary flow data. We chose to focus on nitrogen metabolism to illustrate one application of the method because it is intended to be applicable to all nutrients and nitrogen included losses into the atmosphere whereas phosphorus and potassium do not. Furthermore, nitrogen is a key nutrient for life and an important limiting factor in both crop and livestock production.

We assessed the current role of crop and livestock production in nutrient use efficiency in the AFWS by re-examining the use efficiency, process efficiency, and circularity concepts. These concepts needed legitimate clarification for our method. For example circularity is sometimes used as an objective (van der Wiel et al., 2020) and sometimes a means (Tseng et al., 2019). Nutrient use efficiency sometimes only refers to process efficiency (Ma et al., 2010) but is sometimes defined as a circularity indicator (Papangelou and Mathijs, 2021). The set of indicators proposed in this paper is not specific to the crop and livestock production sub-systems, it is meant to be used to assess the role of any AFWS sub-system.

To illustrate how the method can also be used to assess the potential role of crops and livestock, i.e. to characterise the changes in the indicators depending on improvement actions, we chose to use an improvement scenario. The most relevant scenario for Reunion Island was the recycling of unused secondary products (i.e. the circularity part) as it represents ongoing multi-stakeholder dynamics in Reunion Island (Vigne et al., 2021). The scenario also offers an opportunity to identify the links between recycling actions and both circularity indicators and AFWS efficiency indicators.

In this paper, we do not consider structural changes, rather, as the first step in our reflection, we consider the actions needed to increase circularity and process efficiency in a defined economic structure. These actions (see figure 1) are logistic, organisational and technical, and should result in fewer sources of inefficiency and less imports. Implementing these actions in the short term is more realistic than implementing structural changes (e.g. changes in land use, changes in herd size). These actions apply in particular in the context of isolated islands, which raises particular questions due to the economic and environmental costs of long-distance imports. Disregarding structural changes particularly implies not accounting for a change in atmospheric inputs and local production, and in exports of primary products (types and/or quantities). Disregarding structural changes drove our choice of the groups of indicators (figure 1), in particular to define system efficiency as an objective. Importing more food instead of producing locally, or exporting more, would for example 'artificially' increase the system efficiency, but on the other hand, would externalise environmental impacts. Disregarding structural changes also drove our choice of the system, as considering structural changes could expand potential connectable activities beyond waste management.

2. Method

The method is based on 1) nutrient flow analysis of the AFWS, 2) selection and calculation of indicators using a detailed typology of flows, and 3) analysis of an improvement scenario based on recycling.

2.1 Nutrient flow analysis of the agri-food waste system

The AFWS consists of inputs of nutrients to plants (fertiliser), animals (feed, bedding) and humans (food) as well as upstream and downstream flows, including flows entering the system from the world market and from the atmosphere, and flows leaving the system to enter the world market, the atmosphere, the sub-soil and surface water, and landfills. The coherence of this system is based on the fact that activities undertaken inside the system are interconnected by the use or supply (or potential use or supply) of the same materials that comprise the flows of the system. The definition of the system is thus specific to the region: a type of material can be considered as potentially usable in the system in some contexts while it can be considered as not available in other contexts.

The system we studied (nitrogen flows) was quantified using nine sub-systems (table 1). The flow quantification is done over a year. The sub-systems other than crops and livestock were chosen according to their activity sector. We chose not to allocate waste management to several sub-systems based on the origin of the inputs in order to obtain a global understanding of this sector, in particular in terms of total quantity of secondary products received and supplied by the crop and livestock sub-systems. Data were collected from 2017 to 2021 either at the source through interviews (e.g. provided by the firms), or calculated based on the literature (e.g. regional studies and databases). Further details are provided in supplementary material (SM1).

Table 1: typology of AFWS sub-systems

Sub-system	Description
Crops	Cropland production, which includes grassland and non-food products (e.g. flowers). Losses into the atmosphere that occur while both synthetic and organic fertiliser are being spread (including direct manure deposition by animals grazing on pasture), are allocated to this sub-system.
Livestock	Animal production (e.g. meat, milk, manure), management of the manure in stables and during manure storage.
Forestry and wood processing	Production and processing of wood intended for the system.
Fisheries	Fish production and fishing
Processing and distribution of plant and animal inputs	Processing and distribution of fertiliser (all imported in this group), livestock bedding (all imported in this group), livestock and pet feed.
Processing and distribution of agri-food products	Processing and distribution of imported food and agricultural primary products (food and non-food)
Human living activities	Food consumption, production of urban plants (kitchen gardens, gardens and green spaces), consumption of pet feed.
Energy production	Energy production (electricity, heat, biofuel), which includes combustion and anaerobic digestion.
Waste management	Management of livestock manure off-farm (composting, drying, denitrification), treatment of animal carcasses and dead animals (shredding, incineration), processing of waste from the wood sector, wastewater treatment (denitrification), treatment of solid industrial and urban waste (shredding, composting).

2.2. Indicators

Many indicators have already been used to assess circularity and efficiency at regional level (Corona et al., 2019; Parchomenko et al., 2019). Here we focus on complementary indicators to reveal the role played by crops and livestock in the nutrient use efficiency of an AFWS. Three groups of indicators (blue boxes in figure 1) were chosen to characterise (i) AFWS efficiency (see 2.2.1), (ii) process efficiency (see 2.2.2) and (iii) circularity between sub-systems (see 2.2.3). The indicators were defined and calculated based on a typology of 15 flows (table 2). 'Product' is used here as a generic term to refer to handled material. The production of primary products is the purpose of the activities. Secondary products are other products, i.e. wastes and by-products. Inefficiency refers here to nutrient use and not to the purpose of the process. Indeed, some processes are designed to intentionally lose nutrients, e.g. denitrification in wastewater treatment plants. The sources of inefficiency were divided in two parts, those due to the processes and those due to non-recycling (table 2). Unused secondary products (placed in landfills or discharged into the environment) were considered as inefficient due to non-recycling. Variations in stock (i.e. storage in soils and population growth), losses into the atmosphere and losses to the sub-soil and surface water were considered as sources of process inefficiency. The stock variations correspond to the difference between the initial and the final state of the stock for a one year period.

A key point is that the nutrient use efficiency was calculated in two different ways. To assess the efficiency of the system, nutrient use efficiency was calculated for the used output products (i.e. primary products and used secondary products). In other words, considering both process inefficiency and non-recycling inefficiency as sources of inefficiency. To assess the efficiency of the sub-systems (i.e. processes), nutrient use efficiency was calculated for the total output products (i.e. primary products, used secondary products and unused secondary products). In others words, not including the non-recycling of unused secondary products as a source of inefficiency, which made it possible to isolate the assessment of the inefficiency due to processes. The assessment of the inefficiency due to non-recycling is itself isolated in the circularity group of indicators, where unused secondary products are sources of inefficiency.

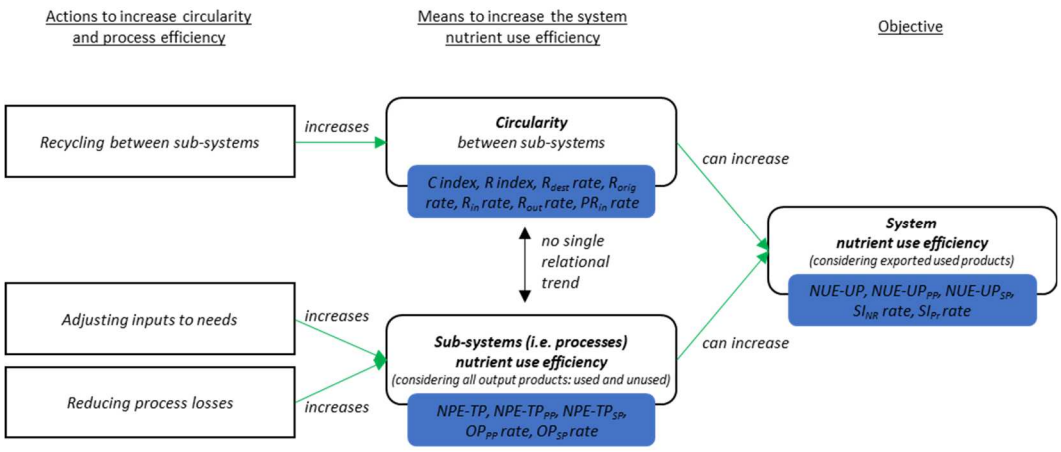

Figure 1: *Actions, means, objective and their corresponding indicators. The objective refers to the assessment of a system when tending to have the least negative environmental impacts resulting from changes in the nutrient cycles. We assume a system with no structural changes.*

Table 2: Typology of flows used to calculate the indicators

		Type of flow	Sources of inefficiency		favourable scenario trend*
			non-recycling inefficiency	process inefficiency	
AFWS input flows	1	imported products (both primary and secondary products)			↘
	2	atmospheric inputs - symbiotic fixation			-
	3	atmospheric inputs - atmospheric deposition			-
Internal AFWS flows between sub-systems	4	locally used primary products			↘
	5	locally used secondary products (i.e. recycling routes)			↗
AFWS output flows	6	exported primary products			-
	7	exported used secondary products			-
	8	losses of unused secondary products - landfill	✓		↘
	9	losses of unused secondary products - discharged into the environment	✓		↘
	10	losses into the atmosphere - intentionally		✓	-
	11	losses into the atmosphere - unintentionally		✓	-
	12	losses to sub-soils and surface water - intentionally		✓	-
	13	losses to sub-soils and surface water - unintentionally		✓	-
Variations in stock within sub-systems	14	variation in stock - storage in soils		✓	-
	15	variation in stock - population growth		✓	-

**Favourable trends are hypotheses concerning the recycling-based improvement scenario (see 2.3.).*

2.3.1 Indicators to assess AFWS efficiency

Nutrient use efficiency has already been used as an indicator at both system and sub-system levels (Grillot et al., 2018; Zhang et al., 2015). Nutrient use efficiency assesses the efficiency of the use of nutrient to produce output products. It generally focuses on the production of primary products. However, in the context of nutrients flows in an AFWS, secondary products are sometimes inevitable (e.g. manure, human excrement) and we consequently consider them to be fully-fledged products. We thus defined an explicit nutrient use efficiency for the used output products (*NUE-UP*, equation 1) as the conversion of the total inputs ($input_{tot}$) into used output products ($output_{UP}$), i.e. to both primary products ($output_{PP}$) and used secondary products ($output_{USP}$). The total inputs include product inputs and atmospheric inputs (i.e. atmospheric deposition and symbiotic fixation). Inefficiency includes all sources of inefficiency (SI_{tot}): due to processes and due to non-recycling (see table 2, flow n°8 to 15).

$$NUE\text{-}UP = \frac{output_{UP}}{input_{tot}} = \frac{output_{PP} + output_{USP}}{input_{tot}} = 1 - \frac{SI_{tot}}{input_{tot}} = NUE\text{-}UP_{PP} + NUE\text{-}UP_{SP} \quad \text{(eq. 1)}$$

In order to inform the two parts of the NUE-UP regarding primary and the secondary products, we set a primary product nutrient use efficiency (NUE-UP_{PP}, equation 2) and a secondary product nutrient use efficiency (*NUE-UP_{SP}*). *NUE-UP_{PP}* assesses the conversion of the total inputs ($input_{tot}$) into primary output products ($output_{PP}$). *NUE-UP_{SP}* assesses the conversion of total inputs ($input_{tot}$) into used output secondary products ($output_{USP}$).

$$NUE\text{-}UP_{PP} = \frac{output_{PP}}{input_{tot}} = 1 - \frac{SI_{tot} + output_{USP}}{input_{tot}} \quad \text{(eq. 2)}$$

$$NUE\text{-}UP_{SP} = \frac{output_{USP}}{input_{tot}} = 1 - \frac{SI_{tot} + output_{PP}}{input_{tot}} \quad \text{(eq. 3)}$$

In order inform the nature of the sources of inefficiency, the total sources of inefficiency (SI_{tot}) were divided into two parts: those due to non-recycling (SI_{NR}) (see table 2, n°8 and 9) and those due to the processes (SI_{Pr}) (see table 2, n°10 to 15). The SI_{NR} *rate* (equation 4) and SI_{Pr} *rate* (equation 5) are the shares of respectively, non-recycling inefficiency (SI_{NR}), and process inefficiency (SI_{Pr}) of the total sources of inefficiency.

$$SI_{NR}\, rate = \frac{SI_{NR}}{SI_{tot}} = 1 - SI_{Pr} rate \quad \text{(eq. 4)}$$

$$SI_{Pr}\, rate = \frac{LSV_{PI}}{LSV_{tot}} = 1 - SI_{NR}\, rate \quad \text{(eq. 5)}$$

Even though this group of indicators was set to assess the AFWS efficiency, they were also calculated at sub-system level. Indeed, at sub-system level, it is also informative to have the total sources of inefficiency and to distinguish whether they are due to the processes or to non-recycling.

2.3.2 Indicators to assess process efficiency

To assess nutrient use efficiency at the sub-system level by considering only inefficiency due to the processes themselves (i.e. excluding the non-recycling of unused secondary products in the inefficiency), we chose to set a nutrient use efficiency for the total output products (*NUE-TP*, equation 6). NUE-TP thus assesses the conversion of the total inputs ($input_{tot}$) into total output products ($output_{TP}$), i.e. into both primary products ($output_{PP}$) and total (used and unused) secondary products ($output_{SP}$). It should be noted that the total output products ($output_{TP}$) is not the same as the total outputs ($output_{tot}$), the latter being the sum of the total output products ($output_{TP}$) and the process inefficiency (SI_{Pr}). Overall, for the system and for each sub-system, the total input ($input_{tot}$) is equal to the sum of the total outputs ($output_{tot}$) and the stock variation.

$$NUE\text{-}TP = \frac{output_{TP}}{input_{tot}} = \frac{output_{PP} + output_{SP}}{input_{tot}} = 1 - \frac{SI_{Pr}}{input_{tot}} = NUE\text{-}TP_{PP} + NUE\text{-}TP_{SP} \quad \text{(eq. 6)}$$

In order to inform the two parts of the *NUE-TP* regarding the primary and the secondary products (like for the *NUE-UP*), we set a primary product nutrient use efficiency ($NUE\text{-}TP_{PP}$, equation 7) and a secondary product nutrient use efficiency ($NUE\text{-}TP_{SP}$, equation 8). As all primary products are used products, $NUE\text{-}TP_{PP}$ does not differ from $NUE\text{-}UP_{PP}$. $NUE\text{-}TP_{SP}$ assesses the conversion of the total inputs ($input_{tot}$) into total secondary output products ($output_{SP}$).

$$NUE\text{-}TP_{PP} = \frac{output_{PP}}{input_{tot}} = NUE\text{-}UP_{PP} = NUE\text{-}TP \times OP_{PP}\,\text{rate} \quad \text{(eq. 7)}$$

$$NUE\text{-}TP_{SP} = \frac{output_{SP}}{input_{tot}} = \frac{output_{USP} + LSV_{NR}}{input_{tot}} = NUE\text{-}TP \times OP_{SP}\,\text{rate} \quad \text{(eq. 8)}$$

In order to inform the nature of the output products, we set the primary output product rate (OP_{PP} *rate,* equation 9) and the secondary output product rate (OP_{SP} *rate,* equation 10). OP_{PP} *rate* is the share of the primary output products ($output_{PP}$) of the total output products ($output_{TP}$). The OP_{SP} *rate* is the share of the secondary output products ($output_{SP}$) of the total output products ($output_{TP}$). In particular, it shows if the processes mainly (or only) produce primary or secondary products.

$$OP_{PP}\, rate = \frac{output_{PP}}{output_{TP}} = 1 - OP_{SP}\,\text{rate} \quad \text{(eq. 9)}$$

$$OP_{SP}\, rate = \frac{output_{SP}}{output_{TP}} = 1 - OP_{PP}\,\text{rate} \quad \text{(eq. 10)}$$

2.3.3. Indicators used to assess circularity between sub-systems

Cycling and recycling indexes

The cycling index is already widely used in the literature as an indicator to assess nutrient circularity at the system level and between sub-systems with a delimited system boundary (Alvarez et al., 2014). Specifically, this index shows how the nutrients circulate inside the system rather than entering or leaving the system. We set the cycling index (*C index*, equation 11) as the proportion of total internal flows between sub-systems (*IF*) among the total flows (*TF*).

$$C\ index = \frac{IF}{TF} \quad \text{(eq. 11)}$$

However, in our conceptual framework, the *C index* could not reach 100% as we assume no structural changes (i.e. the same exported primary products and same atmospheric inputs). To inform the maximum C index in this context, we set a theoretical maximum C index

(C_{max} *index*, equation 12). The maximum internal flows between sub-systems (IF_{max}) would be the sum of the current internal flows between sub-systems (*IF*) and the current unused secondary products (SI_{NR}) flows. The total flows would then be the sum of the maximum internal flows between sub-systems (IF_{max}), the minimum sources of inefficiency (SI_{min}), the minimum import of products ($IMPORT_{min}$), the unchanged current export of products (*EXPORT*) and the unchanged atmospheric inputs ($ATMO_{in}$). SI_{min} is the minimum quantity of the total sources of inefficiency attainable when the quantity of internal flows is maximum. $IMPORT_{min}$ is the minimum quantity of imported products attainable when the quantity of internal flow is maximum. If the atmospheric inputs ($ATMO_{in}$) are lower than the export of products (*EXPORT*), SI_{min} would be null. The minimum import of products ($IMPORT_{min}$) would be the difference between export of products (*EXPORT*) and atmospheric inputs ($ATMO_{in}$). If the atmospheric inputs ($ATMO_{in}$) are higher than the export of products (EXPORT), SI_{min} would be the difference between the atmospheric inputs ($ATMO_{in}$) and the export of products (*EXPORT*). The minimum imports of products ($IMPORT_{min}$) would be null.

$$Cmax\ index = \frac{IF_{max}}{IF_{max} + SI_{max} + IMPORT_{min} + EXPORT + ATMO_{in}} \quad \text{(eq. 12)}$$

where:
$IF_{max} = IF + SI_{NR}$
If $ATMO_{in} < EXPORT$ then $SI_{min} = 0$ and $IMPORT_{min} = EXPORT - ATMO_{in}$
If $ATMO_{in} > EXPORT$ then $SI_{min} = ATMO_{in} - EXPORT$ and $IMPORT_{min} = 0$

In order to assess the quantity of secondary products that are part of the internal recycling routes among the total flows of secondary products, we set a recycling index (*R index*, equation 13). The *R index* is the share of locally used secondary products, i.e. the internal flows of secondary products between sub-systems (SPF_{int}), among the total flows of secondary products (SPF_{tot}).

$$R\ index = \frac{SPF_{int}}{SPF_{tot}} \quad \text{(eq. 13)}$$

Origins and destinations of the recycling routes

To assess whether a sub-system is a receiver and/or a supplier of secondary products from the perspective of the system, we defined two indicators to show the origins and destination of the recycling routes (i.e. flows of internal used secondary products within the system). The recycling destination rate (R_{dest} *rate*, equation 14) is the proportion of internal secondary products flows going to a sub-system (SPF_{int} *to the sub-system*) of the total internal flows of secondary products (SPF_{int}). The recycling origin rate (R_{orig} *rate*, equation 15) is the proportion of internal secondary product flows coming from the sub-system (SPF_{int} *from the sub-system*) of the total internal flows of secondary products (SPF_{int}).

$$R_{dest}\ rate = \frac{SPF_{int}\ to\ the\ sub\text{-}system}{SPF_{int}} \quad \text{(eq. 14)}$$

$$R_{orig}\ rate = \frac{SPF_{int}\ from\ the\ sub\text{-}system}{SPF_{int}} \quad \text{(eq. 15)}$$

Recycling of the outputs and inputs of the sub-systems

In order to assess whether secondary products are recycled at the sub-system level or not, we set an output recycling rate (R_{out} *rate*, equation 16) as the proportion of the output of used secondary products ($output_{USP}$) of the total output of secondary products ($output_{SP}$).

$$R_{out}\ rate = \frac{output_{USP}}{output_{SP}} \quad \text{(eq. 16)}$$

To assess to what extent a sub-system uses secondary products among its inputs, we set the input recycling rate (R_{in} *rate*, equation 17) as the proportion of inputs of secondary products ($input_{SP}$) of the total inputs ($input_{tot}$). Due to the presence of favourable atmospheric inputs, *the* R_{in} *rate* had no favourable trend in certain sub-systems (in particular crop production). We thus set as a complementary indicator, an input products recycling rate (PR_{in} *rate,* equation 18) as the proportion of inputs of secondary products ($input_{SP}$) of the total input products ($input_{P}$). The calculation of the share of inputs according to type is widely reported in the literature on crop production (Lassaletta et al., 2016; van der Wiel et al., 2021).

$$R_{in} rate = \frac{input_{SP}}{input_{tot}} \quad \text{(eq. 17)}$$

$$PR_{in} rate = \frac{input_{SP}}{input_{P}} \quad \text{(eq. 18)}$$

2.3. Exploring recycling-based improvement scenarios

The proposed scenario is an illustration of one among other possible actions (figure 1) that may increase AFWS efficiency. The action affects one of the two means, i.e. increasing the circularity between sub-systems.

Scenario

Today, stakeholders in Reunion Island are willing to move towards a "zero biowaste" agenda (MTES, 2018)), and are proposing actions aimed at recycling all unused secondary products. To explore (i) what gain these actions would represent relative to the nutrient use efficiency of the total system and (ii) what role crops and livestock could play, we chose to test a scenario comprising recycling of the unused secondary products through crops and livestock.

Exploratory steps

i) We considered the hypothesis that the nitrogen present in the unused secondary products could theoretically replace the nitrogen in imported products used for crop or livestock production (fertilisers, growing medium, feed and animal bedding). The unused secondary products were characterised according to their potential use for crop and/or livestock production. To give an obvious example, sewage sludge cannot be used as animal feed.

ii) The amounts of mobilizable N were then compared to the N contained in imported products used for the same purpose. For example, 10 tons of nitrogen newly recycled to fertilise crops would replace 10 tons of nitrogen imported as fertiliser. Note that a substitution rate higher than 100% means that all unused secondary products could not be recycled. For example, if the N in imported fertiliser were lower that the N in the newly mobilizable fertiliser (which was not the case in this study).

iii) Finally, nitrogen flows of unused secondary products are reoriented and the corresponding quantity in imported products is reduced.

Hypothesis concerning modifications in the AFWS nutrient metabolism

In addition to no structural changes in the system, potential modifications of AFWS nutrient metabolism that may occur in the scenario are related to other working hypotheses:

- in our conceptual framework, the imported products intended for crops and livestock first go to the sub-system of the processing and distribution of plant and animal inputs before going to the crop and livestock sub-systems,
- no process inefficiency of the substituted nitrogen occurs in the feed processing and distribution sub-system,
- emission factors remain unchanged, i.e. losses into the atmosphere during manure spreading on the land, leaching and runoff,
- unused secondary products could be used directly without passing through other sub-systems (e.g. waste management),
- the scenario would thus result in a decrease in local primary products equal to the reduction of imported products.

2.4 Case study

Reunion Island is a French island located in the Indian Ocean. Like other tropical islands, Reunion Island has a high human population (342 inhabitants/km^2), and which is increasing by +0.5% per year, thereby fuelling two conflicting dynamics: increasing need for food and decreasing availability of croplands due to urban sprawl (INSEE, 2021). Under the pressure of both resources and limited land, in the past, Reunion Island made the decision to import human food and at the same time, to establish high-input crop and livestock production systems that rely on imports of synthetic fertilisers and raw materials for animal feed. Croplands (41 940 ha) are mostly export-oriented: 54% is used to grow sugarcane almost entirely for export of sugar, 29% is grassland (grazing and production of hay and grass silage), intended for the local livestock production, and 13% is dedicated to fruit and vegetable production, mainly destined for the local market (DAAF La Réunion, 2020). Local production covers 40% of the local demand for meat, 100% of the demand for eggs, and 70% of the demand for fruit and vegetables. The context of Reunion Island with a small export to import ratio is also found in other isolated islands (Bahers et al., 2019; Singh et al., 2022). It should be noted that nutrient cycles in Reunion Island have some specificities due to the prevailing humid tropical conditions (Vayssières and Rufino, 2012). More nitrogen losses into the atmosphere are likely to occur due to high temperatures and more run-off caused by more intense rainfall events.

3. Results

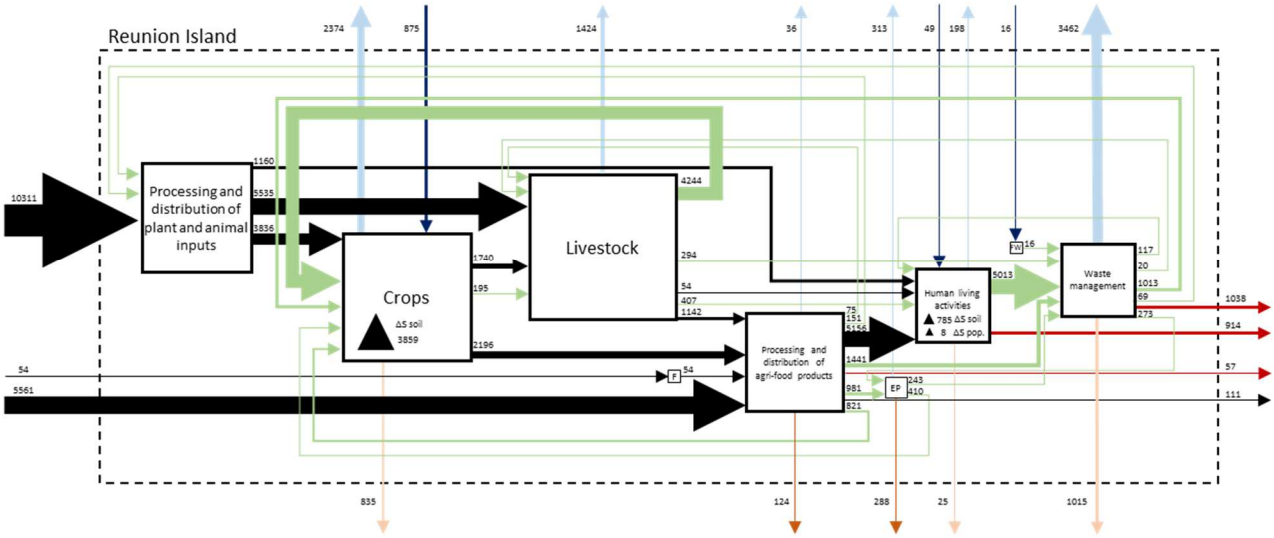

2a. Detailed diagram of the AFWS nitrogen flows, including internal flows between sub-systems

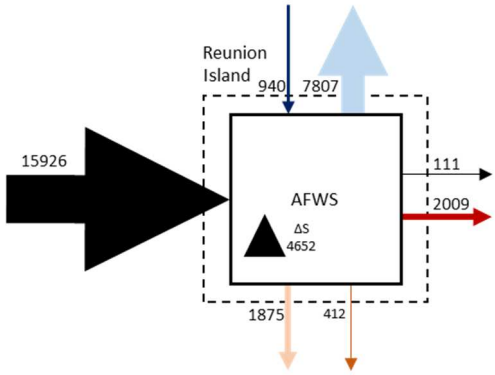

2b. Synthetic "black-box" diagram of the AFWS with aggregated nitrogen flows

	Type of flow	N° in table 2
	Imports, exports and local primary products	(1,4,6,7)
	Atmospheric deposition and symbiotic fixation	(2,3)
Recycling routes	Locally used secondary products	(5)
Non-recycling inefficiency	Losses of secondary products to landfills	(8)
	Losses of secondary products to the environment	(9)
Process inefficiency	Losses into the atmosphere	(12,13)
	Losses to the sub-soil and surface water	(10,11)
	Stock variations	(14,15)

***Figure 2**: Nitrogen flows (in tons N/year) in the agri-food-waste system (AFWS) of Reunion Island. The size of the arrows is proportional to the importance of N flows and the size of the sub-system boxes is proportional to the total N inputs of the sub-systems. FW = forestry and wood processing. EP = energy production. ΔS = stock variations. pop. = population.*

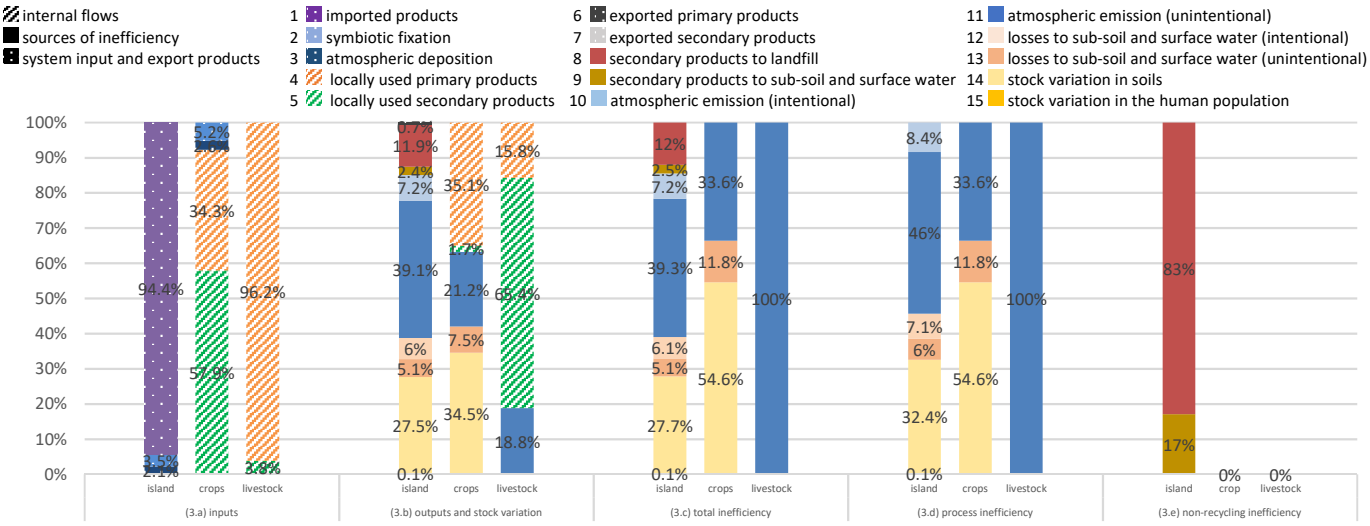

Figure 3: For Reunion Island, crop and livestock levels, share of inputs ($input_{tot}$) (3.a), outputs ($output_{tot}$) and stock variation (3.b), total inefficiency (SI_{tot}) (3.c), process inefficiency (SI_{Pr}) (3.d) and non-recycling inefficiency (SI_{NR}) (3.e) according to the type of flow (see numbers in table 2). Quantitively, for each level, the inputs (3.a) are equal to the outputs and the stock variations (3.b). Quantitatively, for each level, total inefficiency (3.c) is equal to the sum of process inefficiency (3.d) and non-recycling inefficiency (3.e).

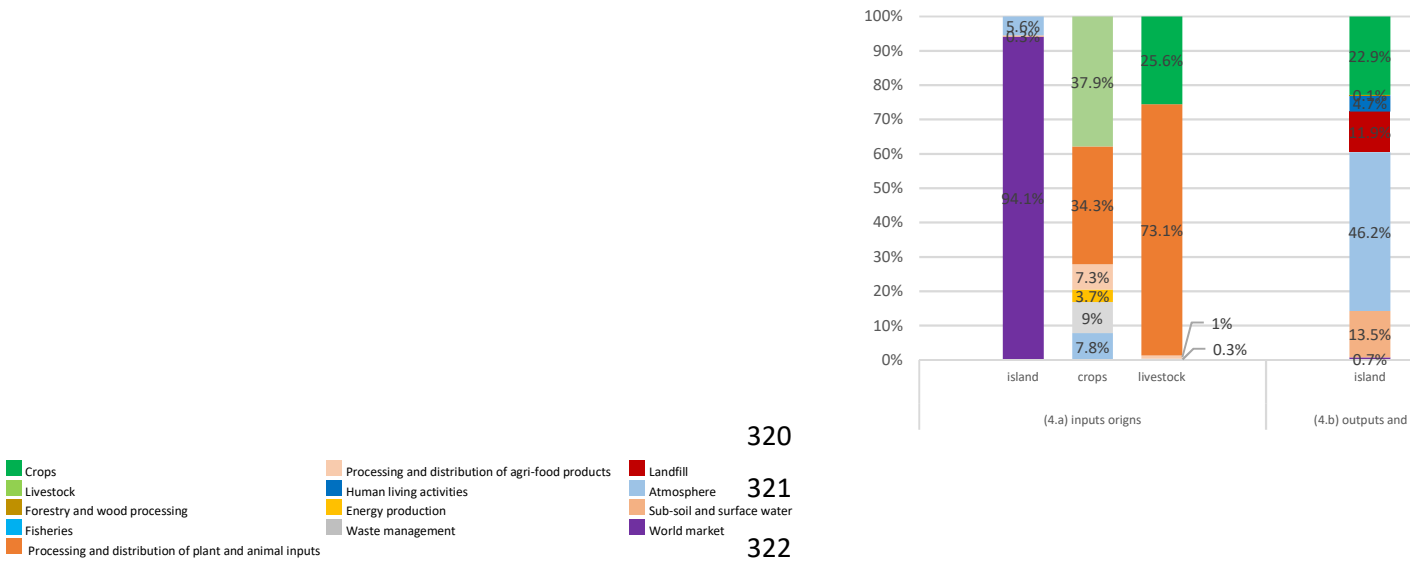

Figure 4: For Reunion Island, crop and livestock levels, share of the input ($intput_{tot}$) origins (4.a) and the destination of outputs ($output_{tot}$) and stock variations (4.b) according to the sub-system (see table 1). For the island, share of the inefficiency according to the sub-system (4.c): regarding total inefficiency (SI_{tot}), process inefficiency (SI_{Pr}) and non-recycling inefficiency (SI_{NR}).

				System	Sub-systems										
									Processing and distribution of plant and animal inputs					Waste management	
				AFWS of the island	Crops	Livestock	Forestry and wood processing	Fisheries	total	only processing and distribution of livestock feed	Processing and distribution of agri-food products	Human living activities	Energy production	total	only livestock manure management
Efficiency considering the used output products	Nutrient use efficiency	(Eq. 1)	*NUE-UP*	0.7% (0.8%)	37%	81%	100%	100%	100%	100%	98% (100%)	72% (85%)	52% (75%)	21% (36%)	72%
		(Eq. 2)	*NUE-UP$_{PP}$*	0.7% (0.8%)	35%	16%	0%	100%	100%	100%	59%	0%	0%	0%	0%
		(Eq. 3)	*NUE-UP$_{SP}$*	0%	2%	65%	100%	0%	0%	0%	39% (41%)	72% (85%)	52% (75%)	21% (36%)	72%
	Sources of inefficiency	(Eq. 4)	*SI$_{NR}$ rate*	14% (0%)	0%	0%	no inefficiency	no inefficiency	no inefficiency	no inefficiency	83% (0%)	47% (0%)	48% (0%)	19% (0%)	0%
		(Eq. 5)	*SI$_{Pr}$ rate*	86% (100%)	100%	100%	no inefficiency	no inefficiency	no inefficiency	no inefficiency	17% (100%)	53% (100%)	52% (100%)	81% (100%)	100%
Efficiency considering the total output products (used and unused)	Nutrient use efficiency	(Eq. 6)	*NUE-TP*	15% (0.8%)	37%	81%	100%	100%	100%	100%	100%	85%	75%	36%	72%
		(Eq. 7)	*NUE-TP$_{PP}$*	0.7% (0.8%)	35%	16%	0%	100%	100%	100%	59%	0%	0%	0%	0%
		(Eq. 8)	*NUE-TP$_{SP}$*	14.3% (0%)	2%	65%	100%	0%	0%	0%	41%	85%	75%	36%	72%
	Nature of output products	(Eq. 9)	*OP$_{PP}$ rate*	4%	95%	19%	0%	100%	100%	100%	59%	0%	0%	0%	0%
		(Eq. 10)	*OP$_{SP}$ rate*	96%	5%	81%	100%	0%	0%	0%	41%	100%	100%	100%	100%
Circularity between sub-systems	Cycling index	(Eq. 11)	*C index*	52% (56%)	-	-	-	-	-	-	-	-	-	-	-
		(Eq. 12)	*C$_{max}$ index*	95%	-	-	-	-	-	-	-	-	-	-	-
	Recycling index	(Eq. 13)	*R index*	87% (100%)	-	-	-	-	-	-	-	-	-	-	-
	Local recycling origins and destinations	(Eq. 14)	*R$_{dest}$ rate*	-	41.11% (48.94%)	1.84% (1.59%)	0%	0%	1.39% (1.21%)	-	0%	3.32% (2.88%)	7.95% (6.89%)	44.40% (38.49%)	-
		(Eq. 15)	*R$_{orig}$ rate*	-	1.23% (1.07%)	31.33% (27.16%)	0.10% (0.09%)	0%	0%	-	21.98% (20.05%)	31.76% (32.56%)	4.14% (5.17%)	9.46% (13.90%)	-
	Recycling among outputs	(Eq. 16)	*R$_{out}$ rate*	0% (no secondary output products)	100%	100%	100%	no secondary output products	no secondary output products	no secondary output products	95% (100%)	85% (100%)	69% (100%)	59% (100%)	100%
	Local recycling among inputs	(Eq. 17)	*R$_{in}$ rate*	-	58% (80%)	4%	0%	0%	2%	3%	0%	7.5%	100%	100%	100%
		(Eq. 18)	*PR$_{in}$ rate*	-	63% (86%)	4%	no input products	0%	2%	3%	0%	7.6%	100%	100%	100%

Table 3: Indicators of nitrogen use efficiency considering the used output products, nitrogen use efficiency considering the total output products and nitrogen circularity between sub-systems

Values in brackets represent the potential if the recycling-based scenario were applied (see 2.3)

- means no data are shown when the indicator is irrelevant for the level concerned

3.1. The AFWS in Reunion Island

This section provides an overview of the nitrogen use efficiency at the level of the AFWS. A distinction is made between its two parts: process efficiency and circularity.

3.1.1. AFWS use efficiency

Annual inputs into the AFWS in Reunion Island represent about 17 000 tons of nitrogen (tN) (figure 1). The N inputs consisted of products imported from the world market (96%), symbiotic fixation (3%) and atmospheric deposition (2%) and imports from the ocean provided by local fisheries (0.3%) (figures 3.a. and 4.a.). Most of the imports from the world market were intended for human consumption (5 500 tN), or animal feed (5 000 tN), and for fertilisation (5 000 tN). The nutrient use efficiency in Reunion Island was 0.7% (*NUE-UP* table 3). About 100 tN were exported annually. Exported products were only primary products: mainly sugar cane and some fruit and vegetables.

3.1.2. Process efficiency and circularity

Total AFWS inefficiency was mainly due to process inefficiency (86%) rather than to non-recycling of secondary products (14%) (SI_{Pr} *rate* and SI_{NR} *rate* table 3).

Within process inefficiency, we mainly found unintentional atmospheric emissions (39%, e.g. when spreading fertiliser on land), stock variations in the soil (28%), and secondary products in landfills (12%, e.g. urban biowastes) (figure 3.c). Among the sources of non-recycling inefficiency, we found unused secondary products in landfills represented 83% and unused secondary products discharged into the environment represented 17% (figure 3.e.). These non-recycled flows represented 13% of the total flows of secondary products, meaning 87% of the flows of secondary products are recycled (*R index* table 3).

Considering total flows, the circularity of the current Reunion Island AFWS was assessed at 52% of internal flows between sub-systems (i.e. flows between sub-systems represent 52% of the total flows of the system studied) (*C index* table 3). Also, with no changes in atmospheric inputs and in the production of primary products, we could set a theoretical maximum *C* index at 95% (C_{max} *index* table 3).

3.2. Crops and livestock within the AFWS

3.2.1. Analysis of the share of the sub-systems in the nutrient use efficiency of the system (the objective)

The sources of inefficiency originating from crops and livestock explained 51% (42% from crops and 9% from livestock, respectively) of the total sources of inefficiency of the AFWS (figure 4.c.). Crops and livestock were not responsible for non-recycling inefficiency (figure 3.a. and 4.c.). The main sources of non-recycling inefficiency were waste management (43%) and human living activities (38%). Crops and livestock were responsible for respectively 49% and 10% of the sources of process inefficiency of the AFWS (figure 4.c.). The second main source of process inefficiency after crops was waste management (31%).

3.2.2. Analysis of the efficiency of sub-system processes (one of the two means to reach the objective).

Crop process efficiency was 37% (*NUE-TP* table 3). The main crop productions were primary products, which accounted for 95% of total production (OP_{PP} *rate*, table 3), the great majority represented by N in fodder and sugar cane. The secondary crop products were crop residues and spontaneous fodder used as animal feed. Crop process inefficiency was mainly due to the accumulation of surplus nitrogen in soils, i.e. stock variation in soils (54.6%), and unintentional losses into the atmosphere from the soil and while spreading fertilisers (33.6%) (figure 3.c.). The remaining 11.8% were represented by on-soil leaching and runoff. Crop process efficiency was the second lowest process efficiency after the waste management, which had an *NUE-TP* of 36%.

Livestock process efficiency was 81% (*NUE-TP* table 3). The main output products were secondary products, i.e. manure (81% of total production) (OP_{SP} *rate*, table 3). Livestock process inefficiency was only due to unintentional atmospheric nitrogen emissions from the manure in the stables and during storage (figure 3.d. and 3.e.). It should be noted that 4% of waste management inputs originated from livestock, in the form of off-farm manure management (i.e. composting and denitrification processes). The process efficiency of this off-farm manure management was 72% (*NUE-TP*, table 3).

3.2.3. Analysis of circularity between sub-systems (one of the two means of reaching the objective).

Recycling destinations

Among the total local recycling routes in the AFWS (i.e. internal secondary product flows), respectively 41% and 1.8% went to the crop and the livestock sub-systems (R_{dest} rate table 3). Crops played the second highest recycling receiver role after waste management, which had a R_{dest} *rate* of 44%. At the sub-system level, local secondary products represented 58% of the crop input flows (R_{in} rate table 3). Primary products (almost entirely imported synthetic fertiliser) and atmospheric inputs accounted for respectively 34% and 8% of the crop input flows (figure 4.a). Considering only input products (i.e. not including atmospheric inputs), local secondary products accounted for 63% of crop input flows (PR_{in} *rate* table 3). Local secondary products represented 4% of livestock input flows (R_{in} *rate* table 3).

Recycling routes also reached livestock through the feed industry, as local secondary products represented 3% of the feed industry input flows, e.g. molasses (R_{in} *rate* table 3).

Recycling origins

Of the total local recycling routes in the AFWS, respectively 1% and 31% originated from crops and livestock (R_{orig} *rate* table 3). Livestock played the second highest recycling supplier role after waste management, which had a R_{orig} *rate* of 32%. At the sub-system level, 100% of the secondary products produced by crops and livestock were recycled (R_{out} *rate* table 3). The sub-system with the lowest recycling rate of secondary production was waste management, which had a R_{out} rate of 59%.

3.3. Improvement of the AFWS use efficiency through recycling

This part presents the results of the recycling-based improvement scenario. Unused secondary products represented about 2000 tN per year. The majority of these products were sewage and sewage sludge (41%), urban biowaste (34%) and industrial biowaste (18%). Their current destinations were landfills (83%) and sub-soil and surface water (17%). Unused secondary products consisted of food industry processing residues, food distribution losses, household food waste (including uneaten food), ashes and animal tissues from slaughterhouse waste management, sewage sludge and urban green waste. Technically, these products could be used as crop fertiliser. They were not usable or meant to be used for livestock production. They represented 63% of N inputs from total crop primary products. According to the hypothesis concerning direct substitution of primary products by these non-recycled secondary products, the proportion of secondary products among crop inputs would increase from 58% to 80% (R_{in} *rate* table 3). The share of the secondary products among crop input products would increase from 63% to 86% (PR_{in} *rate* table 3). The share of primary products among the crop inputs would decrease from 38% (figure 4.a) to 13% (data not shown).

At the AFWS level, the efficiency of the island AFWS would increase from 0.7% to 0.8% (*NUE-UP* table 3), i.e. representing an increase of +14%. The cycling index would increase from 52% to 56% (*C index* table 3), i.e. representing an increase of +8%. Imports would be reduced by -15%. It should be noted that self-sufficiency in human food would not change.

4. Discussion

4.1. Roles of crops and livestock in AFWS nitrogen use efficiency

4.1.1. Current role of crops and livestock

Their roles in Reunion Island

The recycling receiver role of crops in Reunion Island does not seem surprising as 63% of the secondary products used by activities other than waste management are or originate from manure and sewage plant sludge, which are directly (or indirectly after energy production) only recyclable on the land. The context in Reunion Island appears to be special, with a high proportion of nitrogen from secondary products among N inputs to crops (i.e. 58%, 38% for manure alone), whereas at the scale of the world, for example, Lassaletta et al. (2016) found 33% of secondary products that only consisted of manure. This suggests that crops in Reunion Island play a specific role in recycling secondary products originating from other activities than livestock (waste management, food-feed industries and energy production). It should be noted that land use is oriented towards the production of sugar, which contains almost no nitrogen. Nitrogen from sugarcane is thus almost entirely found downstream in secondary products. The part going to livestock (i.e. molasses) is very small compared to the part transferred to croplands.

For grasslands alone, N inputs correspond to 73% of manure, 25% of synthetic fertiliser and 2% of atmospheric inputs. For other croplands, N inputs correspond to 52% of secondary products (26% for manure alone), 38% of synthetic fertiliser and 10% of atmospheric inputs, whereas at the global scale, Lassaletta et al. (2016) found respectively, 16% (manure only), 59.5% of synthetic fertiliser and 24.5% of atmospheric inputs.

In regions with a much higher ratio of crop to livestock production, the recycling receiver role of crops was found to be less important. For regions in France with an “intensive cropping system” Le Noë et al. (2017) found 69% of synthetic fertiliser, 17% of atmospheric inputs, 13% of manure and 1% of urban sludge, whereas in regions with an “intensive specialised livestock system”, the same authors found 39% of synthetic fertiliser, 13% of atmospheric inputs, 47% of manure and 1% of urban sludge. Livestock- versus crop-dominated agricultural regions can thus offer opportunities to create circularity between sub-systems and reduce dependency on imported synthetic fertiliser, however in these regions, lower process efficiency values were also often found for crops (Le Noë et al., 2017; Svanbäck et al., 2019; Swaney et al., 2018).

Only a few studies used a comparable systemic scope of the AFWS and included waste management, the food-feed industry and/or energy production in their nitrogen flow analysis. For the Flanders and Wallonia regions of Belgium Papangelou and Mathijs (2021) found that respectively, 3% and 2% of the crop N inputs came from secondary products other than manure, while van der Wiel et al. (2021) found 8% for the German state of North Rhine-Westphalia.

The N use efficiency of crops we found (*NUE-TP*, 37%), is close to the mean found by Zhang et al. (2015) for India (30%), other Asian countries (41%) and the world (42%), and by Ma et al. (2012) for China (35%).

The recycling supplier role of livestock in Reunion Island is not surprising as livestock raising is the activity which consumes the largest amount of nitrogen (as indicated by the size of the livestock box in figure 2), and knowing that it mainly produces N in secondary products rather than in primary products (OP_{SP} rate, 81%). Livestock's very low recycling receiver role is also not surprising in a region where few crop residues and industrial secondary products are meant to be used by livestock. Concerning the primary product N use efficiency of livestock ($NUE\text{-}TP_{PP}$, 16%), Billen et al. (2014) reported a similar result at the scale of North America (17%) and Europe (16%).

Concerning the share of crops and livestock among the total sources of inefficiency for N (51% in our study), Firmansyah et al., (2017) found 68% for the "urban-agricultural system" of the tropical island of St. Eustatius. These authors also found a system efficiency (*NUE-UP*) of 0.9%, which is close to that of our study (0.7%).

Different roles depending on the conceptual framework

A change in the conceptual framework could result in different perspectives regarding the importance of the role played by crops and livestock.

First, activities are sometimes allocated to sub-systems differently, in particular grasslands, which are often considered as a sub-system of the livestock sector (Gerber and FAO, 2013). In our results, grasslands (i) received manure and (ii) are the scene of losses through leaching and runoff. In this case, allocating grassland to livestock activities would (i) reduce the efficiency of the livestock process and (ii) reduce its recycling supplier role. The indicators would also reveal a reduced receiver role for crops as 57% of the manure goes to grasslands.

Second, our conceptual framework targets the AFWS *NUE-UP* at the level of a region. Life cycle thinking is a possible complementary approach to the analysis of nutrient flows, with the aim of increasing the *NUE-UP* at supply chain level. In yet another approach, Harder et al. (2021) suggest including "external sub-system components" in the analysis. In line with this approach, Koppelmäki et al. (2021) also suggest considering "nested circularity" in which "nutrient, biomass and energy cycles are connected and closed across multiple spatial scales". In our study, using a life cycle thinking approach would increase the recycling receiver role of livestock. This is because (i) some primary products in the system are manufactured upstream using local secondary products (3% of inputs to the feed industry), and (ii) some imported products destined for livestock are secondary products (e.g. soybean meal as a component of feed). Considering all the upstream and downstream livestock flows, the quantity of sources of inefficiency would be further increased. Locally it would consist of losses into the atmosphere originating from manure management (e.g. composting) and spreading on local land. Outside the system, it would include all sources of inefficiency due to the production of imported feed and bedding. In our study, no secondary products originating from livestock raising are exported. In the case of Reunion Island, a life cycle thinking approach would not change the role of crops. Nearly all the imported crops inputs are primary products and originate from imports of synthetic fertiliser.

Uncertainties

Although the focus of the paper is on the conceptual framework for defining indicators, we should be aware of the uncertainties associated with their calculation. Each variable used in the calculation of an indicator comes with its own level of uncertainty. The uncertainty of each indicator thus results from the aggregation of the uncertainties of the variables associated with it. In our study, the input and output product flows were quantified using data from local databases and surveys, with limited uncertainties. However, uncertainties are higher for the respective share of the different sources of process inefficiency (atmospheric emissions, storage in soils, run-off and leaching) as they are determined through emission factors established under tropical conditions similar to those of Reunion Island but mostly not locally measured and known to be strongly influenced by a range of locally varying conditions. Thus, the indicators calculated with the input and output product flows can be considered as reliable information, which is the case for all indicators presented in table 3 (eq. 1 to 18). The least reliable information is the share of the different components of the process inefficiency presented in figure 3.b, 3.c and 3.d. The latter uncertainties could be decreased by producing and using locally measured emission factors taking into account the diversity of practices and pedo-climatic conditions met (Rosenstock et al., 2013).

4.1.2 Potential roles of crops and livestock

Circularity

The scenario we studied consisted of recycling unused secondary products in crop and livestock production. It revealed a specific role for cropland as a potential destination. However, it also showed that the limiting factor for recycling to land is land availability. Indeed, if the N in unused secondary products had been twice as high, it would be impossible to recycle all the N, as it would have been more than the amount of N synthetic fertiliser imported. For livestock, the limiting factor was the type of secondary product to be recycled, i.e. some secondary products cannot be used as feed, either directly or after being mixed with other secondary products that cannot be used as feed. However, solutions such as the collection at source of leftover food should be considered (Pinotti et al., 2021).

Process efficiency

Process efficiency is another means to increase AFWS efficiency. Levers differ according to the type of activity. For crops and livestock sub-systems, we need to increase the primary product nutrient use efficiency (*NUE-TP*$_{PP}$), in particular by better adjusting inputs to needs. An increase of the secondary product nutrient use efficiency (*NUE-TP*$_{SP}$) would increase circularity but not necessarily AFWS efficiency. For waste management, we need to increase the secondary nutrient use efficiency (*NUE-TP*$_{SP}$) as inputs and outputs are only secondary products.

4.2. Complementarity of efficiency and circularity concepts and corresponding indicators

4.2.1. A relevant conceptual framework and indicators for studying the metabolism of other substances

Our study focused on nitrogen metabolism but the indicators can be used for phosphorus (P) and potassium (K) in addition to nitrogen. The conceptual framework could also be used to study the energy and carbon use efficiency of the AFWS (Vigne, 2012). This would be advantageous as we know it is useful to consider N, P and K nutrients together (van der Wiel et al., 2020). In particular, we are aware that these results are strongly influenced by the typical losses of N into the atmosphere. In the case of P, for example, process inefficiency would only consist in stock variation, leaching and runoff.

However, for both nutrients and carbon, it is important to note that a positive stock variation could be a beneficial 'inefficiency'. For example, we do not necessarily aim to prevent population growth. Also, increasing carbon stocks helps mitigate climate change (Paustian et al., 2016; Minasny et al., 2017). Conversely, a negative stock variation of nutrients in soils could challenge the sustainability of the system, as nutrients would possibly run out. This highlights the fact that AFWS nutrient use efficiency indicators will, in many decision-making contexts, inform a multi-criteria analysis that includes additional indicators. The problem of GHG emissions is particularly important, knowing that more recycling would probably decrease international transport but require more local transport, thereby rendering the GHG balance uncertain.

4.2.2. Different indicators to distinguish means and objective

The case of Reunion Island illustrates the need to avoid considering efficiency at AFWS level alone. A more comprehensive understanding of the sources of inefficiencies is obtained by adding two other groups of indicators: the efficiency considering the total output products (i.e. to assess process efficiency) and circularity between sub-systems (including the origins and destinations of nutrient flows for each sub-system).

These two supplementary groups of indicators need to be analysed together. Firstly, because increasing process efficiency and circularity individually does not necessarily increase AFWS efficiency. Secondly, because no relational trend can be established between process efficiency and circularity. For example, in our illustration using the AFWS of Reunion Island, livestock process efficiency could be improved by better adjusting inputs to real needs at herd level. This could result in less nitrogen in the manure and hence less losses into the atmosphere from stabling and manure storage. These reduced losses mean increased efficiency at the process level. It would also mean increased efficiency at the AFWS level. However, at the system level, local circularity would be reduced, as fewer secondary products would be circulating.

4.2.3. Different indicators to distinguish different levers

In addition to assessing the current and potential role of crops and livestock, the distinction between circularity, process efficiency, and system efficiency was also useful to characterise the AFWS nutrient metabolism. It allowed us to distinguish the part of the system inefficiency that is due to the non-recycling of unused secondary products and that due to the processes. In Reunion Island, for nitrogen, we found that the system inefficiency is more due to process inefficiency than to non-recycling of secondary products. From a practical point of view, this makes it possible to determine whether the cause of the inefficiency is due to "intra-activity" individual practices or to "inter-activity" organisational factors (e.g. logistics). It suggests that in Reunion Island actions should focus on increasing process efficiency (e.g. by limiting nitrogen losses into the atmosphere) in order to increase system efficiency.

5. Conclusion

Considering (i) system efficiency, (ii) process efficiency and (iii) circularity indicators together made it possible to characterise the roles played by crops and livestock in the nutrient use efficiency of an agri-food-waste system (AFWS). The indicators are complementary and this paper suggests that they should be used together to provide the comprehensive understanding required for sound policy guidance. The system efficiency group of indicators allowed us to assess the objective at regional level. The process efficiency group of indicators allowed us to assess the roles linked to the processes themselves. The circularity group of indicators allowed us to assess the roles linked to circularity between sub-systems. The paper also suggests that process efficiency and circularity should not be seen as objectives but as two means for improved nutrient use efficiency at the AFWS level.

In the AFWS of Reunion Island, our results point to a recycling receiver role for crops and a recycling supplier role for livestock. We also found higher process efficiency for livestock than crops. The recycling-based scenario we explored revealed a potential role of crops in improving AFWS efficiency, in particular by substituting imported synthetic fertilisers with secondary products that are currently not used. However, although not explored here, other options involving process efficiency and/or structural changes (e.g. changes in land use, or changes in human dietary habits), may even have more impact on AFWS efficiency.

This conceptual framework was tested in an isolated island territory. Other contexts should now be considered, for example studying AFWS with contrasted crop or livestock orientations and/or contrasted proportions of secondary products originating from waste management and the food-feed industry.

References

Alvarez, S., Rufino, M.C., Vayssières, J., Salgado, P., Tittonell, P., Tillard, E., Bocquier, F., 2014. Whole-farm nitrogen cycling and intensification of crop-livestock systems in the highlands of Madagascar: An application of network analysis. Agricultural Systems 126, 25–37. https://doi.org/10.1016/j.agsy.2013.03.005

Bahers, J.-B., Perez, J., Durand, M., 2019. Vulnérabilité métabolique et potentialités des milieux insulaires. Le cas de l'île de Ndzuwani (Anjouan), archipel des Comores. Flux N° 116-117, 128–146.

Billen, G., Lassaletta, L., Garnier, J., 2014. A biogeochemical view of the global agro-food system: Nitrogen flows associated with protein production, consumption and trade. Global Food Security, SI: GFS Conference 2013 3, 209–219. https://doi.org/10.1016/j.gfs.2014.08.003

Carpenter, S.R., Caraco, N.F., Correll, D.L., Howarth, R.W., Sharpley, A.N., Smith, V.H., 1998. Nonpoint Pollution of Surface Waters with Phosphorus and Nitrogen. Ecological Applications 8, 559–568. https://doi.org/10.1890/1051-0761(1998)008[0559:NPOSWW]2.0.CO;2

Corona, B., Shen, L., Reike, D., Rosales Carreón, J., Worrell, E., 2019. Towards sustainable development through the circular economy—A review and critical assessment on current circularity metrics. Resources, Conservation and Recycling 151, 104498. https://doi.org/10.1016/j.resconrec.2019.104498

Crippa, M., Solazzo, E., Guizzardi, D., Monforti-Ferrario, F., Tubiello, F.N., Leip, A., 2021. Food systems are responsible for a third of global anthropogenic GHG emissions. Nat Food 2, 198–209. https://doi.org/10.1038/s43016-021-00225-9

Cui, Z., Wang, G., Yue, S., Wu, L., Zhang, W., Zhang, F., Chen, X., 2014. Closing the N-Use Efficiency Gap to Achieve Food and Environmental Security. Environ. Sci. Technol. 48, 5780–5787. https://doi.org/10.1021/es5007127

DAAF La Réunion, 2020. Agreste Mémento la Réunion.

FAO, 2021. The State of Food and Agriculture 2021. FAO. https://doi.org/10.4060/cb4476en

FAO, 2018. Nutrient flows and associated environmental impacts in livestock suppply chains: guidelines for assessment.

Firmansyah, I., Spiller, M., de Ruijter, F.J., Carsjens, G.J., Zeeman, G., 2017. Assessment of nitrogen and phosphorus flows in agricultural and urban systems in a small island under limited data availability. Science of The Total Environment 574, 1521–1532. https://doi.org/10.1016/j.scitotenv.2016.08.159

Gerber, P.J., FAO (Eds.), 2013. Tackling climate change through livestock: a global assessment of emissions and mitigation opportunities. Food and Agriculture Organization of the United Nations, Rome.

Grillot, M., Vayssières, J., Masse, D., 2018. Agent-based modelling as a time machine to assess nutrient cycling reorganization during past agrarian transitions in West Africa. Agricultural Systems 164, 133–151. https://doi.org/10.1016/j.agsy.2018.04.008

Gruber, N., Galloway, J.N., 2008. An Earth-system perspective of the global nitrogen cycle. Nature 451, 293–296. https://doi.org/10.1038/nature06592

Harder, R., Giampietro, M., Smukler, S., 2021. Towards a circular nutrient economy. A novel way to analyze the circularity of nutrient flows in food systems. Resources, Conservation and Recycling 172, 105693. https://doi.org/10.1016/j.resconrec.2021.105693

Harder, R., Wielemaker, R., Larsen, T.A., Zeeman, G., Öberg, G., 2019. Recycling nutrients contained in human excreta to agriculture: Pathways, processes, and products. Critical Reviews in Environmental Science and Technology 49, 695–743. https://doi.org/10.1080/10643389.2018.1558889

Hasler, K., Bröring, S., Omta, S.W.F., Olfs, H.-W., 2015. Life cycle assessment (LCA) of different fertilizer product types. European Journal of Agronomy 69, 41–51. https://doi.org/10.1016/j.eja.2015.06.001

Herrero, M., Thornton, P.K., Notenbaert, A.M., Wood, S., Msangi, S., Freeman, H.A., Bossio, D., Dixon, J., Peters, M., Steeg, J. van de, Lynam, J., Rao, P.P., Macmillan, S., Gerard, B., McDermott, J., Seré, C., Rosegrant, M., 2010. Smart Investments in Sustainable Food Production: Revisiting Mixed Crop-Livestock Systems. Science. https://doi.org/10.1126/science.1183725

Huang, J., Tichit, M., Poulot, M., Darly, S., Li, S., Petit, C., Aubry, C., 2015. Comparative review of multifunctionality and ecosystem services in sustainable agriculture. Journal of Environmental Management 149, 138–147. https://doi.org/10.1016/j.jenvman.2014.10.020

INSEE, S., 2021. Insee Flash La Réunion, n° 218, Décembre 2021.
Koppelmäki, K., Helenius, J., Schulte, R.P.O., 2021. Nested circularity in food systems: A Nordic case study on connecting biomass, nutrient and energy flows from field scale to continent. Resources, Conservation and Recycling 164, 105218. https://doi.org/10.1016/j.resconrec.2020.105218
Lassaletta, L., Billen, G., Garnier, J., Bouwman, L., Velazquez, E., Mueller, N.D., Gerber, J.S., 2016. Nitrogen use in the global food system: past trends and future trajectories of agronomic performance, pollution, trade, and dietary demand. Environ. Res. Lett. 11, 095007. https://doi.org/10.1088/1748-9326/11/9/095007
Lassaletta, L., Billen, G., Grizzetti, B., Garnier, J., Leach, A.M., Galloway, J.N., 2014. Food and feed trade as a driver in the global nitrogen cycle: 50-year trends. Biogeochemistry 118, 225–241. https://doi.org/10.1007/s10533-013-9923-4
Le Noë, J., Billen, G., Garnier, J., 2017. How the structure of agro-food systems shapes nitrogen, phosphorus, and carbon fluxes: The generalized representation of agro-food system applied at the regional scale in France. Science of The Total Environment 586, 42–55. https://doi.org/10.1016/j.scitotenv.2017.02.040
Leinweber, P., Meissner, R., Eckhardt, K.-U., Seeger, J., 1999. Management effects on forms of phosphorus in soil and leaching losses. European Journal of Soil Science 50, 413–424. https://doi.org/10.1046/j.1365-2389.1999.00249.x
Liu, J., You, L., Amini, M., Obersteiner, M., Herrero, M., Zehnder, A.J.B., Yang, H., 2010. A high-resolution assessment on global nitrogen flows in cropland. PNAS 107, 8035–8040. https://doi.org/10.1073/pnas.0913658107
Ma, L., Ma, W.Q., Velthof, G.L., Wang, F.H., Qin, W., Zhang, F.S., Oenema, O., 2010. Modeling Nutrient Flows in the Food Chain of China. Journal of Environmental Quality 39, 1279–1289. https://doi.org/10.2134/jeq2009.0403
Ma, L., Velthof, G.L., Wang, F.H., Qin, W., Zhang, W.F., Liu, Z., Zhang, Y., Wei, J., Lesschen, J.P., Ma, W.Q., Oenema, O., Zhang, F.S., 2012. Nitrogen and phosphorus use efficiencies and losses in the food chain in China at regional scales in 1980 and 2005. Science of The Total Environment, Climate Change and Macronutrient Cycling along the Atmospheric, Terrestrial, Freshwater and Estuarine Continuum - A Special Issue dedicated to Professor Colin Neal 434, 51–61. https://doi.org/10.1016/j.scitotenv.2012.03.028
Minasny, B., Malone, B.P., McBratney, A.B., Angers, D.A., Arrouays, D., Chambers, A., Chaplot, V., Chen, Z.-S., Cheng, K., Das, B.S., Field, D.J., Gimona, A., Hedley, C.B., Hong, S.Y., Mandal, B., Marchant, B.P., Martin, M., McConkey, B.G., Mulder, V.L., O'Rourke, S., Richer-de-Forges, A.C., Odeh, I., Padarian, J., Paustian, K., Pan, G., Poggio, L., Savin, I., Stolbovoy, V., Stockmann, U., Sulaeman, Y., Tsui, C.-C., Vågen, T.-G., van Wesemael, B., Winowiecki, L., 2017. Soil carbon 4 per mille. Geoderma 292, 59–86. https://doi.org/10.1016/j.geoderma.2017.01.002
MTES, 2018. Gestion des déchets sur l'île de la Réunion. Ministère de la Transition écologique et solidaire. René CORNEC et Catherine MIR (coordonnatrice). 94p.
Oosting, S., van der Lee, J., Verdegem, M., de Vries, M., Vernooij, A., Bonilla-Cedrez, C., Kabir, K., 2021. Farmed animal production in tropical circular food systems. Food Sec. https://doi.org/10.1007/s12571-021-01205-4
Papangelou, A., Mathijs, E., 2021. Assessing agro-food system circularity using nutrient flows and budgets. Journal of Environmental Management 288, 112383. https://doi.org/10.1016/j.jenvman.2021.112383
Parchomenko, A., Nelen, D., Gillabel, J., Rechberger, H., 2019. Measuring the circular economy - A Multiple Correspondence Analysis of 63 metrics. Journal of Cleaner Production 210, 200–216. https://doi.org/10.1016/j.jclepro.2018.10.357
Paustian, K., Lehmann, J., Ogle, S., Reay, D., Robertson, G.P., Smith, P., 2016. Climate-smart soils. Nature 532, 49–57. https://doi.org/10.1038/nature17174
Pinotti, L., Luciano, A., Ottoboni, M., Manoni, M., Ferrari, L., Marchis, D., Tretola, M., 2021. Recycling food leftovers in feed as opportunity to increase the sustainability of livestock production. Journal of Cleaner Production 294, 126290. https://doi.org/10.1016/j.jclepro.2021.126290
Rockström, J., Steffen, W., Noone, K., Persson, Å., Chapin, F.S., Lambin, E.F., Lenton, T.M., Scheffer, M., Folke, C., Schellnhuber, H.J., Nykvist, B., de Wit, C.A., Hughes, T., van der Leeuw, S., Rodhe, H., Sörlin, S., Snyder, P.K., Costanza, R., Svedin, U., Falkenmark, M., Karlberg, L., Corell, R.W., Fabry, V.J., Hansen, J., Walker,

B., Liverman, D., Richardson, K., Crutzen, P., Foley, J.A., 2009. A safe operating space for humanity. Nature 461, 472–475. https://doi.org/10.1038/461472a

Rosenstock, T.S., Rufino, M.C., Butterbach-Bahl, K., Wollenberg, E., 2013. Toward a protocol for quantifying the greenhouse gas balance and identifying mitigation options in smallholder farming systems. Environ. Res. Lett. 8, 021003. https://doi.org/10.1088/1748-9326/8/2/021003

Service, R.F., 2014. New recipe produces ammonia from air, water, and sunlight. Science 345, 610–610. https://doi.org/10.1126/science.345.6197.610

Singh, S.J., Huang, T., Nagabhatla, N., Schweizer, P.-J., Eckelman, M., Verschuur, J., Soman, R., 2022. Socio-metabolic risk and tipping points on islands. Environ. Res. Lett. 17, 065009. https://doi.org/10.1088/1748-9326/ac6f6c

Stark, F., Fanchone, A., Semjen, I., Moulin, C.-H., Archimède, H., 2016. Crop-livestock integration, from single practice to global functioning in the tropics: Case studies in Guadeloupe. European Journal of Agronomy 80, 9–20. https://doi.org/10.1016/j.eja.2016.06.004

Steffen, W., Richardson, K., Rockström, J., Cornell, S.E., Fetzer, I., Bennett, E.M., Biggs, R., Carpenter, S.R., de Vries, W., de Wit, C.A., Folke, C., Gerten, D., Heinke, J., Mace, G.M., Persson, L.M., Ramanathan, V., Reyers, B., Sörlin, S., 2015. Planetary boundaries: Guiding human development on a changing planet. Science 347, 1259855. https://doi.org/10.1126/science.1259855

Svanbäck, A., McCrackin, M.L., Swaney, D.P., Linefur, H., Gustafsson, B.G., Howarth, R.W., Humborg, C., 2019. Reducing agricultural nutrient surpluses in a large catchment – Links to livestock density. Science of The Total Environment 648, 1549–1559. https://doi.org/10.1016/j.scitotenv.2018.08.194

Swaney, D.P., Howarth, R.W., Hong, B., 2018. Nitrogen use efficiency and crop production: Patterns of regional variation in the United States, 1987–2012. Science of The Total Environment 635, 498–511. https://doi.org/10.1016/j.scitotenv.2018.04.027

Thévenot, A., Aubin, J., Tillard, E., Vayssières, J., 2013. Accounting for farm diversity in Life Cycle Assessment studies – the case of poultry production in a tropical island. Journal of Cleaner Production 57, 280–292. https://doi.org/10.1016/j.jclepro.2013.05.027

Tseng, M.-L., Chiu, A.S.F., Chien, C.-F., Tan, R.R., 2019. Pathways and barriers to circularity in food systems. Resources, Conservation and Recycling 143, 236–237. https://doi.org/10.1016/j.resconrec.2019.01.015

van der Wiel, B.Z., Weijma, J., van Middelaar, C.E., Kleinke, M., Buisman, C.J.N., Wichern, F., 2021. Restoring nutrient circularity in a nutrient-saturated area in Germany requires systemic change. Nutr Cycl Agroecosyst. https://doi.org/10.1007/s10705-021-10172-3

van der Wiel, B.Z., Weijma, J., van Middelaar, C.E., Kleinke, M., Buisman, C.J.N., Wichern, F., 2020. Restoring nutrient circularity: A review of nutrient stock and flow analyses of local agro-food-waste systems. Resources, Conservation and Recycling 160, 104901. https://doi.org/10.1016/j.resconrec.2020.104901

Van Zanten, H.H.E., Van Ittersum, M.K., De Boer, I.J.M., 2019. The role of farm animals in a circular food system. Global Food Security 21, 18–22. https://doi.org/10.1016/j.gfs.2019.06.003

Vayssières, J., Rufino, M.C., 2012. Managing nutrient cycles in crop and livestock systems with green technologies, in: Boye, J.I., Arcand, Y. (Eds.), Green Technologies in Food Production and Processing, Food Engineering Series. Springer US, Boston, MA, pp. 151–182. https://doi.org/10.1007/978-1-4614-1587-9_7

Vigne, M., 2012. Flux d'énergie dans des systèmes d'élevage laitiers contrastés: Elaboration d'indicateurs et analyse de la diversité inter et intra-territoire. PhD Thesis.

Vigne, M., Achard, P., Alison, C., Castanier, C., Choisis, J.P., Conrozier, R., Courdier, R., Degenne, P., Deulvot, A., Dupuy, S., Février, A., Hatik, H., Huat, J., Kleinpeter, V., Kyulavskim, V., Lurette, A., Payet, A.L., Rondeau, P., Soulié, J.C., Thomas, P., Thuries, L., Tillard, E., Van de Kerchove, V., Vayssières, J., 2021. Une agronomie clinique et territoriale pour accompagner la transition vers une économie circulaire autour de l'agriculture : mise à l'épreuve et enseignements du projet GABiR à La Réunion. AE&S 11. https://doi.org/10.54800/bir974

Walling, E., Vaneeckhaute, C., 2020. Greenhouse gas emissions from inorganic and organic fertilizer production and use: A review of emission factors and their variability. Journal of Environmental Management 276, 111211. https://doi.org/10.1016/j.jenvman.2020.111211

Willemen, L., Hein, L., van Mensvoort, M.E.F., Verburg, P.H., 2010. Space for people, plants, and livestock? Quantifying interactions among multiple landscape functions in a Dutch rural region. Ecological Indicators 10, 62–73. https://doi.org/10.1016/j.ecolind.2009.02.015

Zanten, H.H.E.V., Herrero, M., Hal, O.V., Röös, E., Muller, A., Garnett, T., Gerber, P.J., Schader, C., Boer, I.J.M.D., 2018. Defining a land boundary for sustainable livestock consumption. Global Change Biology 24, 4185–4194. https://doi.org/10.1111/gcb.14321

Zhang, X., Davidson, E.A., Mauzerall, D.L., Searchinger, T.D., Dumas, P., Shen, Y., 2015. Managing nitrogen for sustainable development. Nature 528, 51–59. https://doi.org/10.1038/nature15743